MAXX series 3

MAXX Series 3 Owner's Manual

WILSON

Downloaded from www.linephaze.com
- Find specs, manuals and used listings across thousands of audio products.

Wilson Audio® is a registered trademark of Wilson Audio Specialties, Inc.

Cub®, Sophia®, WATT/Puppy®, MAXX®, and Alexandria® are registered trademarks of Wilson Audio Specialties, Inc.

WilsonGloss™, Duette by Wilson Audio™, WATCH® Center, WATCH® Surround, Thor's Hammer™, and WATCH® Dog are trademarks of Wilson Audio Specialties, Inc.

This manual was produced by the Wilson Audio Engineering and the Sales and Marketing Departments. The information contained herein is subject to change without notice. Current Revision 3.0. If you are in need of a more recent manual, please contact your dealer.

The information in this manual is the sole property of Wilson Audio Specialties, Inc. Any reproduction, in whole or in part, without the express written permission of Wilson Audio Specialties, Inc., is prohibited. No material contained herein may be transmitted in any form or by any means, electronic or mechanical, for any purpose, without the express written permission of Wilson Audio Specialties, Inc.

CE

Downloaded from www.linephaze.com
- Find specs, manuals and used listings across thousands of audio products.

MAXX Series 3 Owner's Manual 1

Section 1 – Introduction 7

Section 1.1 – Introduction 9

Aspherical Propagation delay 10

Section 2 – In Your Room 13

Section 2.1 – Room Acoustics 15

Final Listening Room Setup (Voicing) 15

Zone of Neutrality 15

Section 2.2 – Room Reflections 17

Slap Echo 18

Standing Waves 20

Comb Filter Effect 21

Section 2.3 – Resonances 22

Structural Resonance 22

Volume Resonance 23

Section 2.4 – Your Room 23

Room Shapes 23

MAXX Series 3 in a Dedicated Home Theater 25

Speaker Placement Versus Listening Position 25

Speaker Orientation 26

Summary 27

Section 3 – Uncrating the MAXX 29

Section 3.1 – Uncrating the MAXX 31

Initial Check 31

Tools Required 31

Downloaded from www.linephaze.com
- Find specs, manuals and used listings across thousands of audio products.

Uncrating the Woofer Modules 32
Unpacking the Woofer 32
Uncrating the Upper Array Modules 32
Crate Contents Checklist 33

Section 4 – Assembly 35

Section 4.1 – Initial Assembly 37
Removing the Protective Film 37

Section 4.2 – Geometric Time Domain Alignment 38
Materials Required 38
Propagation delay Alignment 38
Room Setup 39
Alignment Procedure 39

Section 4.3 – Mounting the Lower Tweeter/MidModule 43
Materials Required 43
Mounting Procedure 43
Install the Lower Tweeter/Midrange Module 43

Section 4.4 – Mounting the Upper Midrange Module 45

Section 4.5 – Connecting Upper Modules' Signal Cable 45

Section 4.6 – Locking Down The Upper Modules 47
Materials Required 47
Installing Tether Bolt in the Upper Midrange Module 47

Section 4.7 – Spike Installation 47
Spike Assembly 47

Section 4.8 – Using the Lift to Install Spikes 49
Materials Required 49
Installation Procedure 49

Downloaded from www.linephaze.com
- Find specs, manuals and used listings across thousands of audio products.

Leveling the MAXX 51
Section 4.9 – Resistors 52
Woofer Damping Resistor 52
Section 4.95 – Break-in Period 53
Section 5 – Care of MAXX 55
Section 5.1 – Care of the Painted Finish 57
Care of the Grill 58
Section 5.2 – Enclosure Construction 59
Material 59
Adhesive 59
Conclusion 60
Section 6 – Troubleshooting 61
Section 6.1 – Troubleshooting 63
Section 7 – System Specifications 67
Section 7.1 – Specifications: 69
Section 7.2 – MAXX Dimensions 70
Section 8 – Propagation delay Tables 71
Number 1: Lower Tweeter/Midrange Module Spike Length .. 73
Number 2: Lower Tweeter/Midrange Module Block Position 73
Number 3: Lower Tweeter/Midrange Module Block Step 74
Number 4: Upper Midrange Module Spike Length 75
Number 5: Upper Midrange Module Spike Detent Location .. 75
Section 9 – Warranty Section 77
Section 9.0 – Warranty Information 79

Downloaded from www.linephaze.com
- Find specs, manuals and used listings across thousands of audio products.

Limited Warranty 79
Conditions 79
Remedy 80
Warranty Limited to Original Purchaser 80
Demonstration Equipment 81
Miscellaneous 81

Downloaded from www.linephaze.com
- Find specs, manuals and used listings across thousands of audio products.

MAXX series 3

Section 1 – Introduction

WILSON

Downloaded from www.linephaze.com
- Find specs, manuals and used listings across thousands of audio products.

Downloaded from www.linephaze.com
- Find specs, manuals and used listings across thousands of audio products.

Section 1.1 – Introduction

From all of us at Wilson Audio Specialties — thank you for purchasing the MAXX® Series 3 loudspeaker. The information contained within the pages of this manual will inform and instruct on the proper assembly, set up, and long term care of your MAXX Series 3s.

The original MAXX arrived with a clear design objective: create a loudspeaker endowed with similar authority and dynamic range as Wilson's flagship speaker, the original X-1 Grand SLAMM®, but in a less complex and demanding package.

In the subsequent years, Dave Wilson and his design team discovered ways to improve the MAXX, hence the Series 2. They also came to realize that, as good as it was, by one important benchmark—propagation delay—the MAXX Series 2 platform was incapable of further improvement.

Among the technical innovations of the MAXX Series 3:

- All-new midrange driver evolved from the revolutionary Alexandria Series 2 midrange unit.

- All-new upper module design with two upper modules replacing the single module of the original MAXX. Although it is far more accurate than competing designs, the single, three-driver head of both MAXX Series 1 and Series 2 runs into the laws of geometry and physics. It is simply impossible to align three drivers in one module for ideal propagation delay. The solution? Divide MAXX's dual midrange drivers and tweeter into two upper modules and introduce Aspherical Group Delay.

- Aspherical Propagation Delay. Achieving near perfect alignment at the listening position requires controlling both the rotational angle of the head (for proper dispersion) and the time alignment of the driver (its relative distance to the listener). MAXX Series 3 joins the Alexandria as the only speaker to feature this technology.

Downloaded from www.linephaze.com
- Find specs, manuals and used listings across thousands of audio products.

- New crossovers. Applying new technology adapted from the Series 2 Alexandria. Further work in reducing propagation delay jitter has lowered the noise floor and has increased overall resolution, particularly in the time between transients.

- New resistor connector plate with reduced resonance and greater heat dissipation. The new plate is user-accessible and is located in the rear plane of the woofer enclosure.

Aspherical Propagation delay

A musical waveform is a complex overlay of frequencies, amplitudes, and phase relationships. With current technology, no single transducer can reproduce the full range of music at realistic sound pressure levels while maintaining consistent dispersion. The solution is the multiple driver array, with specific drivers dedicated to various portions of the frequency range. Multiple drivers introduce their own set of problems. A challenge typically ignored by speaker designers is preserving the precise time relationships of the leading edge of the musical waveform.

The key to solving this problem lies in Wilson's innovative and patented Adjustable Propagation Delay technology, which employs movable modules

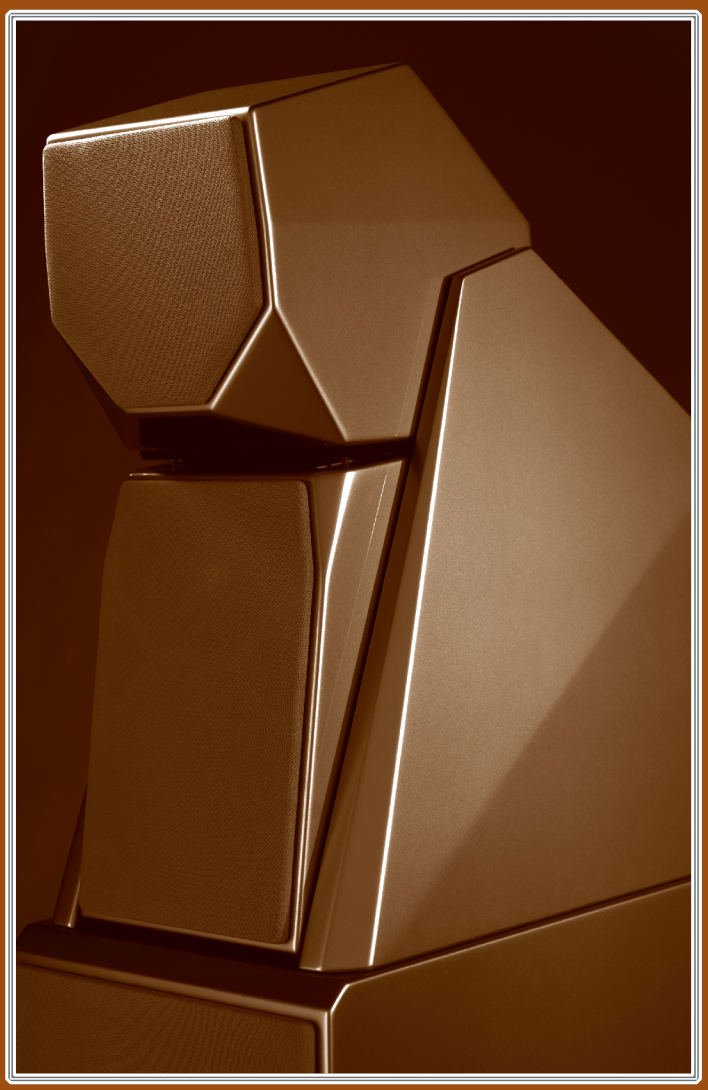

Figure 1 – MAXX's Modules Move Aspherically to Correct Propagation Delay

Downloaded from www.linephaze.com
- Find specs, manuals and used listings across thousands of audio products.

that allow the individual adjustment of the drivers in the time domain. Using this technology, each driver's waveform propagation "matches up" with the other drivers in the system in such a way as to create the sonic equivalent of a single point source. Certain other loudspeaker makers recognize the need to correctly align their drivers, but they do

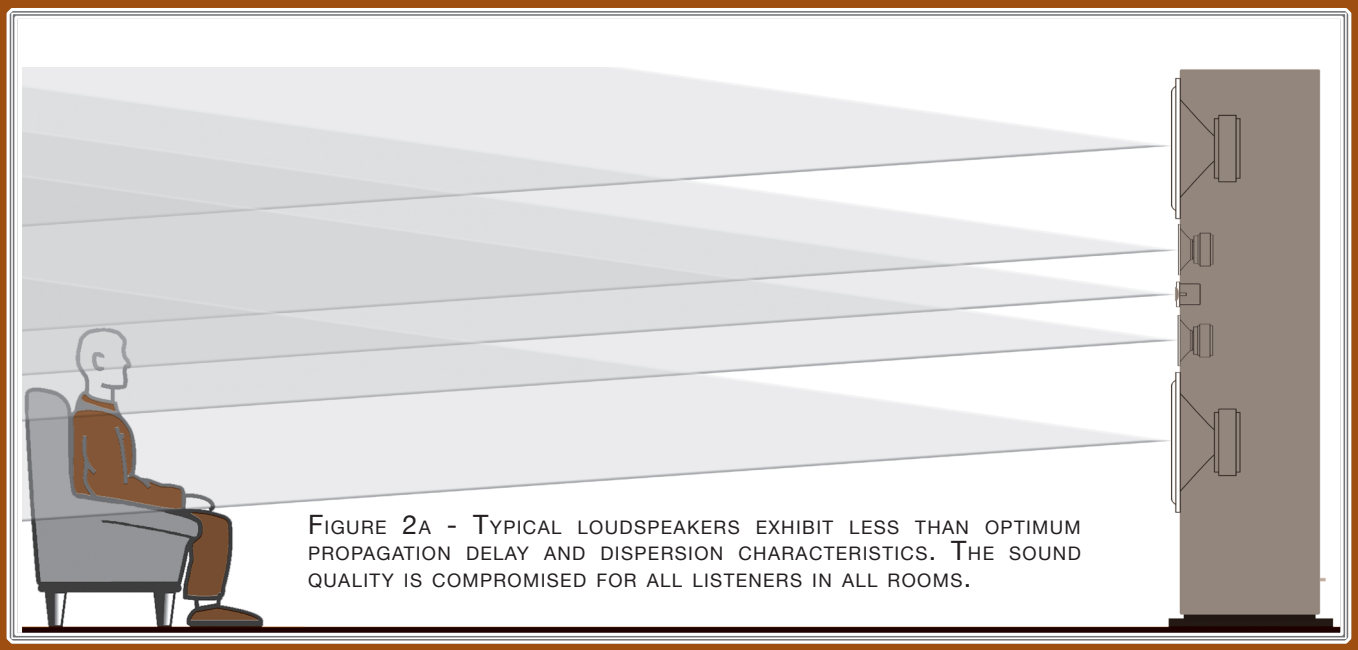

Figure 2a - Typical loudspeakers exhibit less than optimum propagation delay and dispersion characteristics. The sound quality is compromised for all listeners in all rooms.

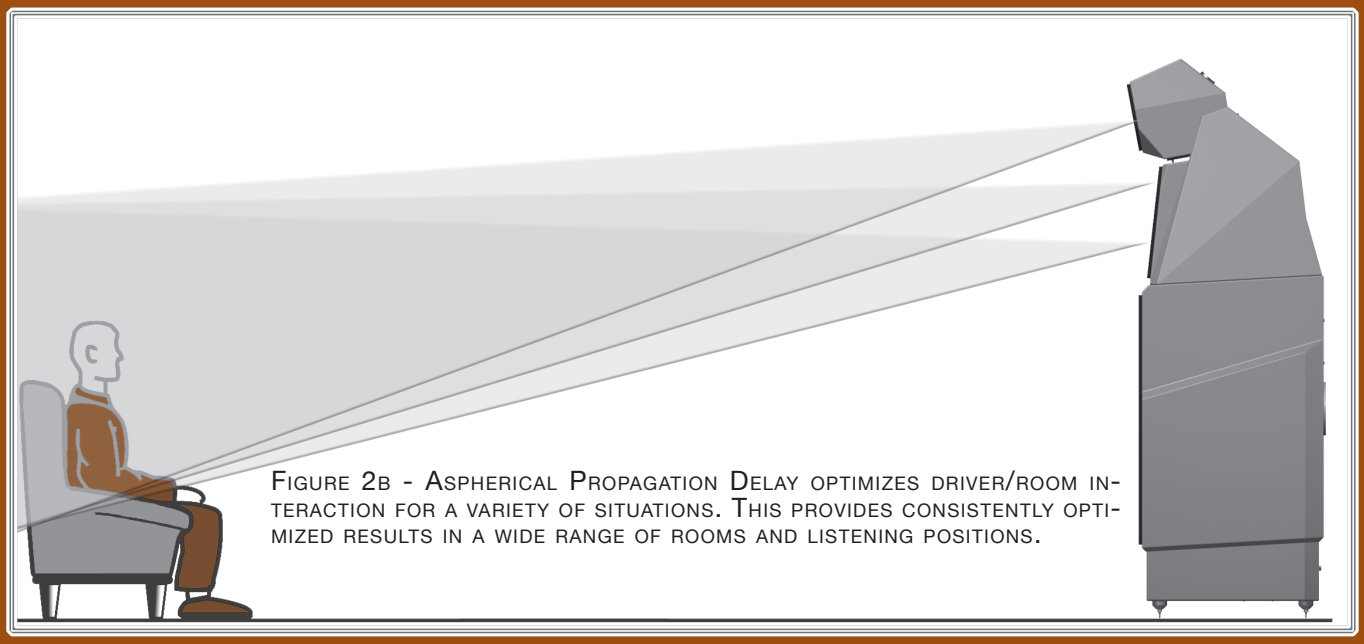

Figure 2b - Aspherical Propagation Delay optimizes driver/room interaction for a variety of situations. This provides consistently optimized results in a wide range of rooms and listening positions.

Figure 2 – MAXX's Modules Move Aspherically to Correct Propagation Delay

Downloaded from www.linephaze.com
- Find specs, manuals and used listings across thousands of audio products.

so for only one theoretical listening position.

The fact is, misalignment of the drivers by fractions of an inch will audibly degrade transient accuracy, soundstage height, depth, and width. Misalignment of the drivers will also introduce tonal anomalies that destroy the otherwise convincing "presence" of an instrument or a singer's voice. Wilson's solution for propagation delay correction has long set the standard for precise driver positioning in order to insure correct time alignment for a wide range of real room listening distances and ear heights.

The MAXX cabinet is a further evolution of Wilson's philosophy that truly great forms follow a corresponding function. It is a visual metaphor for the solution Wilson Audio pioneered to address issues of phase coherence exacerbated by large speaker systems. Typical of the creative process, the solution itself is an analogy to the field of optics and the design of wide-angle lenses. The means of maintaining edge-to-edge sharpness at both close and far focusing distances for a high quality wide-angle lens suggested a solution to the similar problem of time domain accuracy for large speaker systems at both near and far listening positions.

With MAXX Series 3, Wilson Audio takes this concept a logical step further, addressing the issue of optimal driver dispersion in the large cabinet system. Ideal driver dispersion for both near and far listening positions requires the drivers be adjustable not only forward and back, but also able to rotate on their polar axes.

With MAXX Series 3, you and others you listen with, will hear your favorite recordings and soundtracks with true time coherency, full frequency range, unfettered dynamics, and vanishingly low distortion. The improvement in realism wrought by MAXX Series 3 is delightfully revolutionary.

Downloaded from www.linephaze.com
- Find specs, manuals and used listings across thousands of audio products.

MAXX series 3

Section 2 – In Your Room

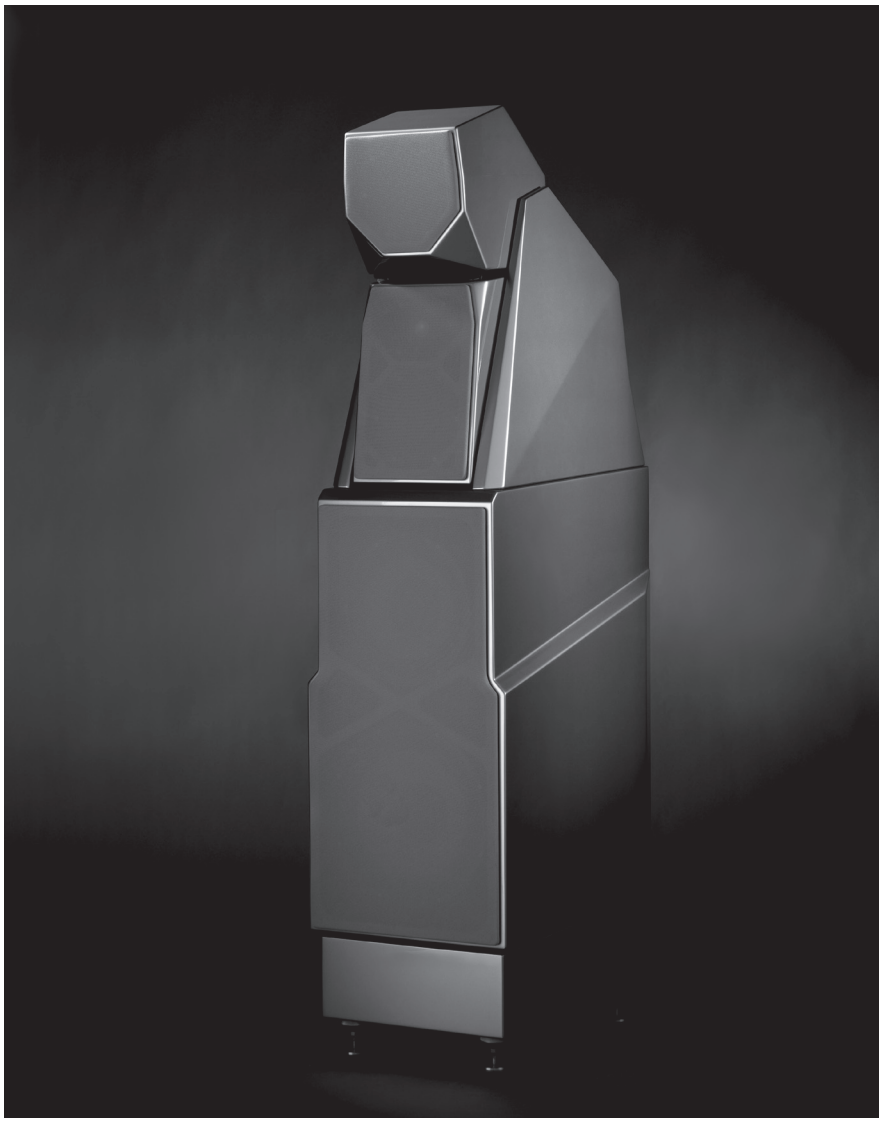

WILSON

Downloaded from www.linephaze.com
- Find specs, manuals and used listings across thousands of audio products.

Downloaded from www.linephaze.com
- Find specs, manuals and used listings across thousands of audio products.

Section 2.1 – Room Acoustics

You are surely excited about setting up your MAXX Series 3 loudspeakers and doing some listening, but before you begin, we would like to discuss some of the important room acoustical information that will help you set up your loudspeakers properly.

Final Listening Room Setup (Voicing)

For a speaker system its size, the MAXX Series 3 is unmatched in its ability to reproduce the musical event. It is truly state-of-the-art. However, room acoustics and boundary interactions affect the sound of a loudspeaker to such a large degree that poor setup can seriously degrade your enjoyment of even the finest loudspeaker.

Therefore, we offer the following section, which will present some guidelines on room acoustics and their interactions with loudspeakers. While we will also outline some detailed suggestions on the setup of the MAXXs, we strongly suggest that you have your local Wilson Audio dealer perform the final speaker "voicing" with you. Wilson dealers are specially trained in setting up Wilson loudspeakers and will ensure that you realize the full value of your purchase.

Zone of Neutrality

The "Zone of Neutrality" is an area in your room where the speakers will sound most natural. This location is where the speakers interact the least with adjacent room boundaries. It is important to have a clear working space while determining the Zone of Neutrality.

The following is a simple method to locate the Zone of Neutrality within your listening environment:

1. Stand against the wall BEHIND the location (the rear wall) where you intend to position your MAXXs. Speaking in a moderately loud voice and at a constant volume, project your voice out into the room. Your voice will have an overly heavy, "chesty" quality be-

Downloaded from www.linephaze.com
- Find specs, manuals and used listings across thousands of audio products.

cause of your proximity to the rear wall.

2. While speaking, slowly move out into the room, progressing in a direction parallel to and at least two and half feet from the nearest sidewall. It is helpful to have another listener seated in the listening position to assist you during this process. Listen to how your voice "frees up" from the added bass energy imparted by the rear wall boundary. Also notice that your voice is quite spatially diffuse (to your assistant, your voice will sound spatially large and difficult to localize) as you begin to ease away from the rear wall behind you.

3. At some point during your progression forward into the room, you will observe a sonic transition in your voice; it will sound more tonally correct and less spatially diffuse (your assistant can now precisely localize the exact origin of your voice). When you hear this transition, you have entered the inner edge of the Zone of Neutrality. Place a piece of tape on the floor to mark this location. Although it will vary from room to room, the zone in most rooms begins between two and a half to three feet from the rear wall.

4. Continue to walk slowly away from the rear wall. After some distance, usually one to two feet past the first piece of tape, you will begin to hear your voice lose focus and appear to reflect (echo) in front of you. This is caused by the return of the room's boundary contribution; your voice is now interacting with the opposite wall. At the point where you begin to hear the reflected sound of your voice, you have reached the outer edge of the Zone of Neutrality. Place a piece of tape on the floor and mark this location. The distance between the "inner" and "outer" edge tape marks is usually between eight inches (for small, interactive rooms) and two feet (for large, very neutral rooms).

5. Now position yourself against the side wall perpendicular to the intended speaker location. Stand between the two tape marks. Using the same procedure as above, begin moving into the room toward

Downloaded from www.linephaze.com
- Find specs, manuals and used listings across thousands of audio products.

the opposite sidewall, progressing between the two pieces of tape. As above, listen for the point in the room where your voice transitions from bass-heavy and diffuse to neutral. Mark this point with tape. Continue your progression until there is an obvious interaction with the opposite wall in front of you and mark this point with tape. The four pieces of tape now form a rectangle that establishes the Zone of Neutrality for the loudspeaker located on that side of the room. Using the four marks as your guide, tape an outline to define the boundaries of the rectangle.

6. Repeat this process for each speaker location individually. These are your Zones of Neutrality, one for each channel.

Theoretically, the Zone of Neutrality for any room runs like a path, parallel to the walls all around the room. Adjacent to very large windows and open doors, the inner edge of the Zone of Neutrality moves closer to the wall and the Zone of Neutrality becomes wider. If you were to extend the inner and outer boundaries of the Zone for the sidewalls and the front wall (behind the speakers), they would intersect. After you complete this procedure for the other loudspeaker, you will now have two rectangles, one on the floor on either side of the room.

Note: The more reflective or "live" sounding the room is, the more difficult it will be to detect the changes in your voice; thus, you may have to repeat this process until the zones have been determined.

Section 2.2 – Room Reflections

Note: The following section contains general information on room acoustics and loudspeaker/room interaction. The concepts outlined below are equally relevant when dealing with multi-channel audio or home theater. The careful application of these concepts, as you evaluate the acoustical characteristics of your own room configuration, will allow you to optimize the performance of your MAXXs.

Downloaded from www.linephaze.com
- Find specs, manuals and used listings across thousands of audio products.

Slap Echo

Probably the most obnoxious form of reflection is called "slap echo." With slap-echo, primarily midrange and high frequency sounds reflect off of two parallel hard surfaces. The sound literally reverberates back and forth until it is finally dissipated over time. You can test for slap echo in any room by clapping your hands sharply in the middle of the room and listening for the characteristic sound of the echo in the midrange. Slap echo destroys the sound quality of a stereo system in two ways:

- It adds harshness to the upper midrange and treble by storing time-domain smearing energy.

- It destroys the delicate phase relationships, which help to establish

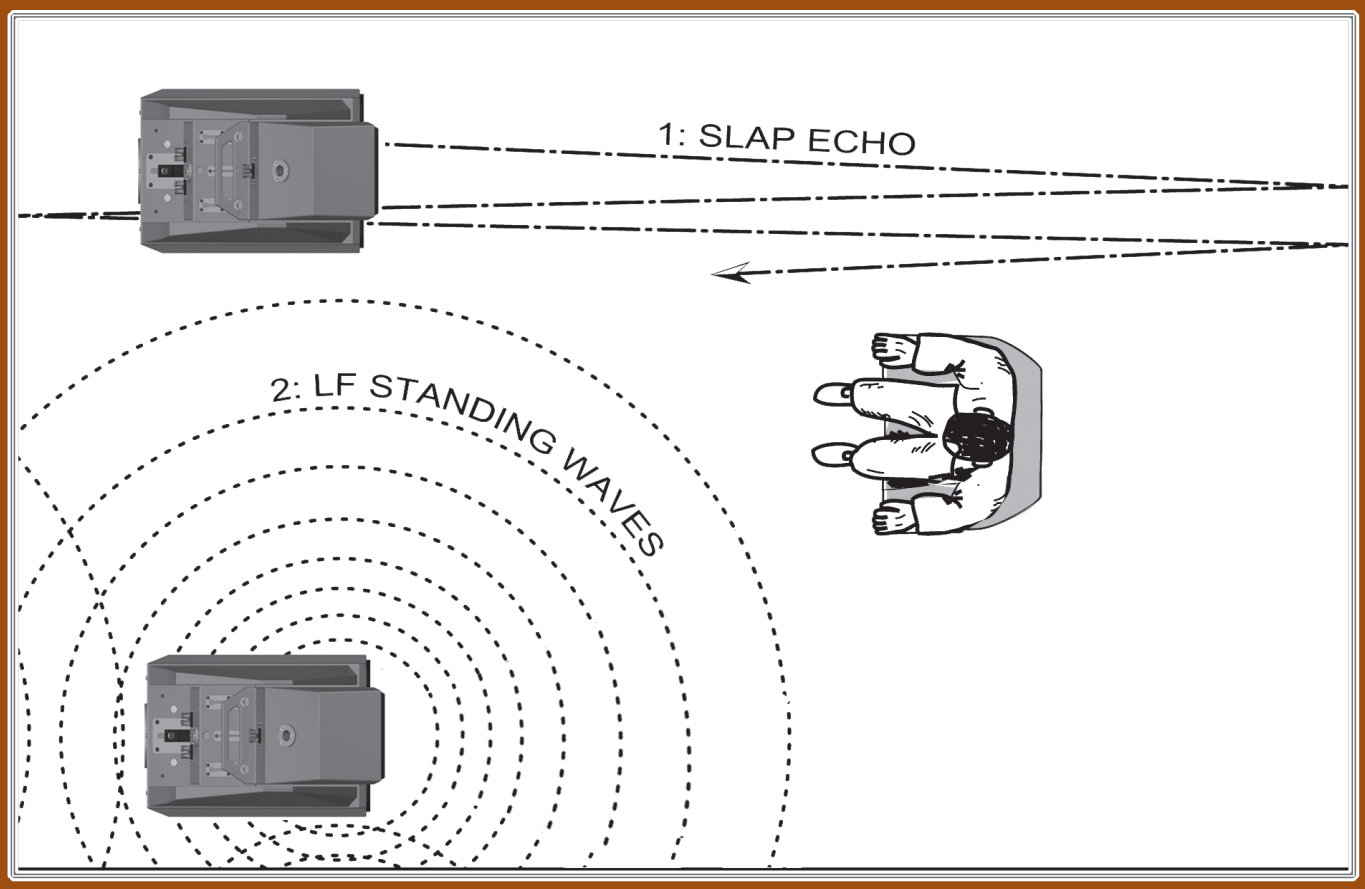

Figure 3 – Common Room Reflection Problems

Downloaded from www.linephaze.com
- Find specs, manuals and used listings across thousands of audio products.

an accurate soundstage.

Slap echo (see Figure 3) is a common acoustical problem in the typical domestic listening room because most of these rooms have walls with a hard, reflective nature, only occasionally interrupted by curtains, wall art, or drapes. The best (but least practical) solution to eliminate slap echo is nonparallel walls. This is because, rather than support slap-echo, nonparallel walls allow the sound to diffuse. This approach can be accounted for during the construction process. For existing rooms, slap echo can also be controlled entirely by the application of absorptive materials to the hard surfaces. These are absorptive materials that can be used to ameliorate slap echo:

- RPG Absorbor®
- Air duct board
- Cork panels
- Large ceiling to floor drapes
- Carpeting to wall surfaces

In many domestic listening environments, heavy stuffed furnishings reduce slap echo somewhat. Unfortunately, their effectiveness is not predictable. Diffusers are sometimes also used to very good subjective effect, particularly in quite large rooms. Sound absorbent materials such as described above may alter the tonal characteristic of the room by making it sound "deader," less "bright and alive," and "quieter." These changes usually make the room more pleasant for conversation, but sometimes render it too dull in the high frequencies to be musically involving. Soundtrack effects will be more localized. However, over-damping the room can render reproduced sound that is lacking in musical involvement and "aliveness."

Diffusers, on the other hand, do not affect the tonal balance characteristic of the

Downloaded from www.linephaze.com
- Find specs, manuals and used listings across thousands of audio products.

room as much. Placed properly, diffusers create a smoother and more open sound. Some diffusers, due to their construction, create narrow midrange peaks and suck-out the warmth region. Do not use diffusers on the wall behind the speakers or on the sidewalls directly beside the speakers. It is our experience that all of these room treatment devices should be used judiciously.

Standing Waves

Another type of reflection phenomenon is "standing waves." Standing waves cause the unnatural boosting or accentuation of certain frequencies, typically in the bass, to be found at certain discreet locations in the room. These locations differ according to room dimension and size. A room that supports severe standing waves creates difficulty in setup. In these rooms, the speaker will sound radically different as it is moved around. The effects of standing waves on a loudspeaker's performance are primarily in the areas listed.

- Low Frequency Tonal balance
- Resolution of low-level detail
- Soundstaging

Standing waves are more difficult to correct than slap echo because they tend to occur at a lower frequency. Absorbent materials, such as RPG Absorbor®, are ineffective at controlling reflections in the bass region. Moving speakers about slightly in the room is, for most people, their only control over standing waves. Sometimes a change of placement of as little as two or three inches can dramatically alter the tonal balance of a small system.

Fortunately, minor low frequency standing waves are well controlled by positioning RPG Modex Corner panels or ASC Tube Traps™ or in the corners of the room. Very seri-

Downloaded from www.linephaze.com
- Find specs, manuals and used listings across thousands of audio products.

ous low frequency accentuation usually requires a custom-designed bass trap system.

Low frequency standing waves can be particularly troublesome in rooms constructed of concrete or brick. These materials trap the bass in the room unless it is allowed to leak out of the room through windows and doors.

In general, placement of the speaker in a corner will excite the maximal number of standing waves in a room and is to be avoided for most direct radiator, full-range loudspeaker systems. Some benefit is achieved by placing the stereo pair of loudspeakers slightly asymmetrically in the listening room. This is so the standing waves caused by the distance between one speaker and its adjacent walls and floors are not the same as the standing wave frequencies excited by the dimensions in the other channel.

Comb Filter Effect

The "comb filter" effect is a special type of standing wave noticeable primarily at higher frequencies and shorter wavelengths.

Acoustical comb filtering occurs when sound from a single source, such as a loudspeaker, is directed toward a microphone or listener from a distance. The first sound to reach the microphone is the direct sound, followed by a delayed, reflected sound. At certain frequencies, cancellation occurs because the reflected sound lags in phase relative to the direct sound. This cancellation is most apparent where the two frequencies are 180 degrees out of phase. Further, there is augmentation at other frequencies where the direct and the reflected sounds arrive in phase. Because it is a function of wavelength, the comb filter effect will notch out portions of the audio spectrum at linearly spaced intervals. Subjectively, comb filter effect evidences itself as follows:

- Added roughness to the sound
- Reduction of harmonic richness

Downloaded from www.linephaze.com
- Find specs, manuals and used listings across thousands of audio products.

- Smearing of lateral soundstage image focus and placement

Comb filter effects are often caused by floor or ceiling reflection and sometimes side wall reflections. They are best controlled by very careful speaker placement and by the judicious placement of RPG Absorbor® or air duct panels applied to that part of the wall where the reflection occurs.

Section 2.3 – Resonances

Resonance in listening rooms is generally caused by two sources:

- Structures within the listening room.
- The volume of air itself within the listening room.

Structural Resonance

Structural resonances are familiar to most people as buzzes and rattles, but this type of resonance usually only occurs at extremely high volume levels and is usually masked by the music. In many wood frame rooms the most common type of structural resonance problem is "booming" of walls and floors. You can test for these very easily by tapping the wall with the palm of your hand or stomping on the floor. Most rooms exhibit mid-bass "boom" when struck. The loudspeaker playing in the room also excites these resonances. To give you an idea of what the perfect wall would sound like, imagine rapping your hand against the side of a mountain. Structural wall resonances generally occur in the low to mid-bass frequencies and add a false fullness to the tonal balance. They, too, are more prominent at louder levels, but their contribution to the sound of the speaker is more progressive. Rattling windows, picture frames, lamp shades, etc., can generally be silenced with small pieces of caulk or with blocks of felt. However, short of actually adding additional layers of sheet rock to flimsy walls, there is little that can be done to eliminate wall resonances.

Downloaded from www.linephaze.com
- Find specs, manuals and used listings across thousands of audio products.

Volume Resonance

The physical dimensions and volume of air in a room will also support standing wave modes and resonances at frequencies determined by the size of that room. Larger rooms will resonate at a lower frequency and have more complex (better) modal distributions than will smaller rooms. Volume resonances, wall panel resonances, and low frequency standing waves combine to form a low frequency coloration in the sound. At its worst, it is a grossly exaggerated fullness, which tends to obscure detail and distort the natural tonal balance of the speaker system.

Occasionally, however, there is just enough resonance to give a little added warmth to the sound – an addition some listeners prefer. Careful placement of loudspeakers in the room can dramatically reduce the speakers' destructive interaction with low frequency modes. ASC Tube Traps™ are effective in reducing some of this low frequency room coloration. Custom designed bass traps, such as perforated Helmholtz resonators, provide the greatest degree of low frequency control.

Section 2.4 – Your Room

Room Shapes

Standing waves are pressure waves propagated by the interaction of sound and opposing parallel walls. This interaction creates patterns of low and high acoustical pressure zones that accentuate and attenuate particular frequencies. Those frequencies are dependent on room size and dimension.

There are three basic shapes for most rooms: square, rectangular, and L-shaped (see Figure 4).

A perfectly square room is the most difficult room in which to set up speakers. By virtue of its shape, a square room is the perfect medium for building and sustaining standing waves. These rooms heavily influence the music played by loudspeakers, greatly

Downloaded from www.linephaze.com
- Find specs, manuals and used listings across thousands of audio products.

diminishing the listening experience.

Long, narrow, rectangular rooms also pose their own special acoustical problems for speaker setup. They have the ability to create several standing wave nodes, which will have different standing wave frequency exaggerations depending on where you are sitting. Additionally, these long rooms are often quite lean in the bass near the center of the room. Rectangular rooms are still preferred to square rooms because, by having two sets of dissimilar length walls, standing waves are not as strongly reinforced and will dissipate more quickly than in a square room. In these rooms, the preferred speaker position for spatial placement and midrange resolution would be on the longer walls. Bass response would be reinforced by speaker placement on the short walls.

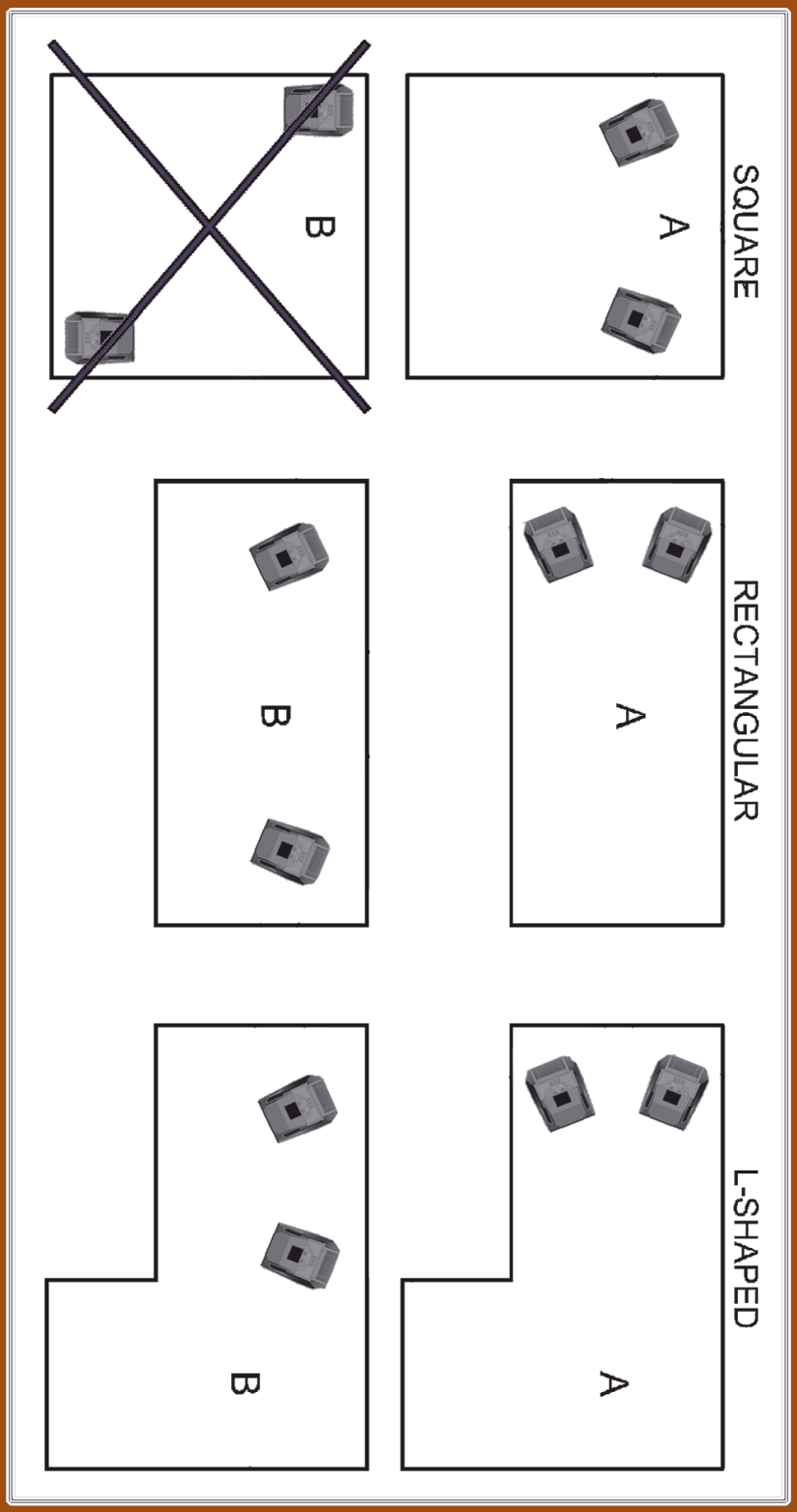

Figure 4 – Possible Loudspeaker Placement within Various Room Shapes

Downloaded from www.linephaze.com
- Find specs, manuals and used listings across thousands of audio products.

In many cases, L-shaped rooms (see Figure 4) offer the best environment for speaker setup. Ideally, speakers should be set up along the primary (longest) leg of the room. They should fire from the end of the leg (short wall) toward the L, or they should be along the longest wall. In this way, both speakers are firing the same distance to the back wall. The asymmetry of the walls in L-shaped rooms resists the buildup of standing waves (see Figure 4).

MAXX Series 3 in a Dedicated Home Theater

Home theaters can be organized many different ways. Some use rows of couches. Others use rows of multiple chairs.

In addition to watching movies, most users want to listen to two-channel music at the highest quality possible. It is desirable, therefore, to choose a single optimum seating position in a home theater and build the rest of the seating positions around this position.

If your optimum position is located on a couch, you should center the loudspeakers on the middle position of the couch.

If the seating area consists of multiple rows of chairs, the second row should be optimized for the best sound quality. Odd numbers of chairs arranged in rows work best as this will allow a single chair to be positioned in the center. This approach will also provide the best overall sound for the greatest number of seats.

Speaker Placement Versus Listening Position

The location of your listening position is almost as important as the careful setup of your MAXX speakers. The listening position should ideally be no more than 1.1 to 1.25 times the distance between the tweeters on each speaker. Therefore, in a long, rectangular room of 12′ x 18′, if the speaker tweeters are going to be 9′ apart, you should be sitting 9′11″ to 11′3″ from the speaker. This would be more than halfway down the long axis of the room.

Downloaded from www.linephaze.com
- Find specs, manuals and used listings across thousands of audio products.

Many people place the speakers on one end and sit at the other end of the room. This approach will not yield the finest sound. Carefully consider your listening position. Our experience has shown that any listening position that places your head closer than 14″ from a room boundary will diminish the sonic results of your listening.

Decide where you want your favorite listening position to be. Please remember that your MAXX Series 3 will fill almost any room with the most beautiful sound available. Because the propagation delay is adjustable on the MAXXs, if you take care in placing your new speakers, you will optimize MAXX's performance in your room.

Speaker Orientation

Speaker placement and orientation are two of the most important considerations in obtaining superior sound. The first thing you need to do is eliminate the sidewalls as a sonic influence in your system. Speakers placed too close to the sidewalls will suffer from a strong primary reflection. This can cause out-of-phase cancellations, or comb filtering, which will cancel some frequencies and change the tonal balance of the music. The Wilson Audio Setup Procedure (Section 2.1) is the best method with which to position your loudspeakers. Start with the speakers about 18″ from each wall and, if you need to move them relative to the side wall, move them away from the wall, not closer.

A very important aspect of speaker placement is how far from the back wall to place the speakers. The closer a loudspeaker is to the back wall, the more pronounced the low bass energy and centering of the image will be. However, this comes at a definite reduction in stage size and bloom as well as a deterioration of upper bass quality. You must find the proper balance of these two factors, but remember, if you are partial to bass response or air and bloom, do not overcompensate your adjustments to maximize these effects. Overcompensated systems are sometimes exciting in the short-term, but long-term satisfaction is always achieved through proper balance.

The Series 3 MAXX is designed for maximum phase coherence when each speaker

Downloaded from www.linephaze.com
- Find specs, manuals and used listings across thousands of audio products.

is aimed directly at the listener or microphone. Thus, your MAXX should be "toed in." In other words, the listener, when seated in the listening position looking forward with his/her head in a rested position, should just barely see the surface of the inner side of each MAXX. Toeing in the speakers provides meaningful improvements in resolution of low-level detail in the midrange as well as appreciable improvements in soundstaging performance.

Summary

In summary, for optimal tonal balance accuracy, resolution of low level detail, and soundstaging performance, the MAXX Series 3 should be positioned as outlined in this section. Ideally, the speakers should not be positioned too far from the listener if maximum resolution of low-level detail is required. If possible, the speakers should be positioned somewhat out into the room, slightly asymmetrically vis-a-vis the side and rear walls. The speakers should be "toed in" toward the listener, preferably so that the listener, at his seated position, can barely see the surface of the inner side of the MAXX as he/she faces the speaker. It is recommended that a distance of two to three feet, and possibly more, be maintained between the MAXX and the rear walls and that a distance of at least two feet be maintained between the front panel of the MAXX and reflective side walls. Depending on the room, judicious, but not excessive, use of sound absorbent materials will reduce the space requirement.

By following the guidelines in this manual, your new MAXX Series 3 loudspeakers can provide you with a lifetime of pure music reproduction.

Downloaded from www.linephaze.com
- Find specs, manuals and used listings across thousands of audio products.

Downloaded from www.linephaze.com
- Find specs, manuals and used listings across thousands of audio products.

MAXX series 3

Section 3 – Uncrating the MAXX

WILSON

Downloaded from www.linephaze.com
- Find specs, manuals and used listings across thousands of audio products.

Downloaded from www.linephaze.com
- Find specs, manuals and used listings across thousands of audio products.

Note: In order to realize the capabilities of the MAXX, we strongly recommend that you have it installed by a trained Wilson Audio installer. Your dealer will have a person trained in the art of the MAXX installation, including the safe method to unpack your loudspeakers.

Note: You will have several modules to unpack that will need to be separated into right and left channels. Clear out two spaces, one for your left and one for your right channel modules. Place the ODD numbered modules in the LEFT channel section and the EVEN in the RIGHT channel section. Prior to assembly, stage the modules away from the area where the speakers are to be assembled. This will avoid clutter in the work area that can result in damage to your loudspeakers.

Section 3.1 – Uncrating the MAXX

Initial Check

The MAXX is shipped in three wooden crates. Upon receiving these crates, please check their condition. If any of the crates are damaged, please report it to the shipping company immediately for insurance verification.

Tools Required

- Metal shears
- Variable speed, reversible electric drill
- Phillips head drive bit

Figure 5 - Woofer Module

Downloaded from www.linephaze.com
- Find specs, manuals and used listings across thousands of audio products.

Uncrating the Woofer Modules

A minimum of two strong adults is required to set up the system. Locate the two largest crates labeled "Woofer Module." These contain the woofer enclosures and are the first components of the system to unpack (see Figure 5).

Note: These two woofer enclosures are very heavy and when moving or lifting, care should be taken in order to prevent injury.

Unpacking the Woofer

1. Open the top of each crate and determine the side where the casters are connected to the bottom of the woofer module.

2. Remove the packing material from between the casters. Rotate the crate up on its end so that the casters on the woofer are toward the floor.

3. While one person holds the crate, roll the woofer enclosure out of the crate. Be very careful not to scratch the module during this process.

4. Finally, move the woofer cabinets over to the "Zone of Neutrality" as determined by the Wilson Audio Setup Procedure outlined. If you have not yet performed this room analysis, please refer to Section 2.1 of this manual. Reminder: Place the odd serial numbered woofer on the LEFT and the even numbered woofer on the RIGHT.

5. Remove the empty woofer crates from the room.

Uncrating the Upper Array Modules

1. Locate the crate labeled "Upper Modules." Remove the four upper modules (two for each channel), from the crate (see Figure 6). It is very important to ensure that each of the modules are matched to one another by serial number. The serial tags are located on the underside of each module. Be very careful in unpacking the re-

Downloaded from www.linephaze.com
- Find specs, manuals and used listings across thousands of audio products.

maining modules to avoid chipping the finish.

2. Stage these items away from traffic flow, preferably against a wall with drivers facing the wall.

3. Remove the empty crates from the room.

Crate Contents Checklist

Now that you have everything unpacked, you can inventory your items.

1 - Owners manual

2 - Woofer modules (left & right channel)

2 - Lower Tweeter/Midrange Modules (left & right channel)

2 - Upper Midrange modules (left & right channel)

2 - Woofer grills

2 - Lower Tweeter/Midrange grills

2 - Upper Midrange grills

1 - Lifting Jack and wrench

8 - Spikes, with nuts

8 - Woofer Mechanical Diode

8 - 3/8 x 1 1/2″ Set screws

1 - 9/16″ Combo wrench

1 - 3/16″ Long-arm Allen wrench

1 - 5/32″ Allen wrench

1 - Caster wrench

1 - 1/2″ Binding post wrench

Upper Midrange Module

Lower Tweeter/Midrange Module

Figure 6 - Uncrate Upper Modules

Downloaded from www.linephaze.com
- Find specs, manuals and used listings across thousands of audio products.

3/8″ Allen wrench

1/8″ Allen wrench

3/32″ Allen wrench

8 - "A" spikes

2 - "B" spikes

2 - "C" spikes

2 - "D" spikes

2 - "E" spikes

2 - "F" spikes

2 - "G" spikes

2 - #2 spikes

2 - #3 spikes

4 - MAXX 3 Tether Bolts

4 - MAXX 3 Tether Caps

2 - Alignment Blocks (installed)

2 - 1/2″ Alignment Block Allen Bolt

1 - Polishing cloths

8 - Large Brass spike pads

Complete set of resistors:

4 - 6.0 ohm tweeter resistor

4 - 5.3 ohm midrange resistor

2 -10.4 ohm barrel resistor

Note: After set up of the system, keep the shipping crates in case of future shipping needs.

Downloaded from www.linephaze.com
- Find specs, manuals and used listings across thousands of audio products.

MAXX series 3

Section 4 – Assembly

WILSON

Downloaded from www.linephaze.com
- Find specs, manuals and used listings across thousands of audio products.

Downloaded from www.linephaze.com
- Find specs, manuals and used listings across thousands of audio products.

Section 4.1 – Initial Assembly

In order to realize the capabilities of the MAXX, we strongly recommend that you have it installed by a trained Wilson Audio installer. Your dealer will have a person trained in the art of the MAXX installation. If you choose to do this installation yourself, here are some guidelines to assist you. These guidelines come from many years of experience and should be followed closely.

First, place the woofer modules in the Zone of Neutrality as determined by the procedure outlined in Section 2.1. Final setup and tuning will follow the assembly of your MAXXs.

Removing the Protective Film

Wilson Audio has applied a protective film with a special adhesive to protect the paint surface of your loudspeakers. Please take the following precautions when removing this film:

1. Ensure the speaker surface is room temperature before removing the protective film. Removing protective film when cold can damage the paint surface.

2. Slowly remove the film from the top down, large sections at a time, gently pulling the film downward and outward. Tearing the film aggressively can damage the paint.

3. Take care in removing the protective film near edges and corners to prevent paint damage in these areas.

4. The protective film **should not** be left on the painted surface for extended periods of time nor exposed to heat sources and direct sunlight.

Downloaded from www.linephaze.com
- Find specs, manuals and used listings across thousands of audio products.

Section 4.2 – Geometric Time Domain Alignment

Materials Required

- Tape measure
- Known listening position (see Section 2)
- MAXX Propagation delay Alignment Tables from Section 8

Propagation delay Alignment

Propagation delay alignment accuracy of the MAXX has been established and verified by Wilson Audio. The graphs and charts used in this section are a result of this testing.

Figure 6 – Measure Listening Distance and Ear Height.

Downloaded from www.linephaze.com
- Find specs, manuals and used listings across thousands of audio products.

Room Setup

As indicated in Figure 6, the MAXX system allows for different listening distances (away from the speakers) and listening ear heights (measured distances from the floor to your ear). For each distance/ear height combination there is a unique alignment geometry.

To make correct in-home set up of the MAXX possible without test equipment, Wilson Audio has measured the correct geometric time domain alignment for different distance/ear height combinations. This information is provided in the Propagation delay Tables in Section 8. By measuring the ear height and the distance from the speaker to the listening position, you will be able to align the system for your listening position.

Alignment Procedure

Locate the Alignment tables in Section 8. These tables contain critical information that will guide you to position the upper modules for optimized propagation delay adjustment.

The Lower Tweeter/Midrange modules rests on a specific step in the Alignment Block. The Alignment Block is calibrated with numbered steps etched on its left side. There are also three spike configurations, the use of which is determined by the distance/ear relationship of the installation. The three configurations are: no spike, or either a number 2 or 3 spike. The the alignment tables also contain information

Figure 7 - Install the Alignment Spikes into the Upper Modules.

Downloaded from www.linephaze.com
- Find specs, manuals and used listings across thousands of audio products.

on the front to back alignment of the lower module. This position is designated by the engraved numbers in the Alignment Block mounting plate. Position by aligning the rear of the Alignment Block to the number indicated in the chart.

Each of the two Upper Midrange Modules' **rear spikes** rests in a specific **numbered indent** that determines its individual propagation delay position within the modular array. Each alignment plate contains numbered indents. The alignment tables contain the information for positioning each module in the array, determined by the indent in which the rear spike rests. The table also contains information on the appropriate length spike to be used in the rear of the module. Determine the alignment of each upper module as follows:

1. Repeat each step of this procedure on the left and right channels simultaneously.

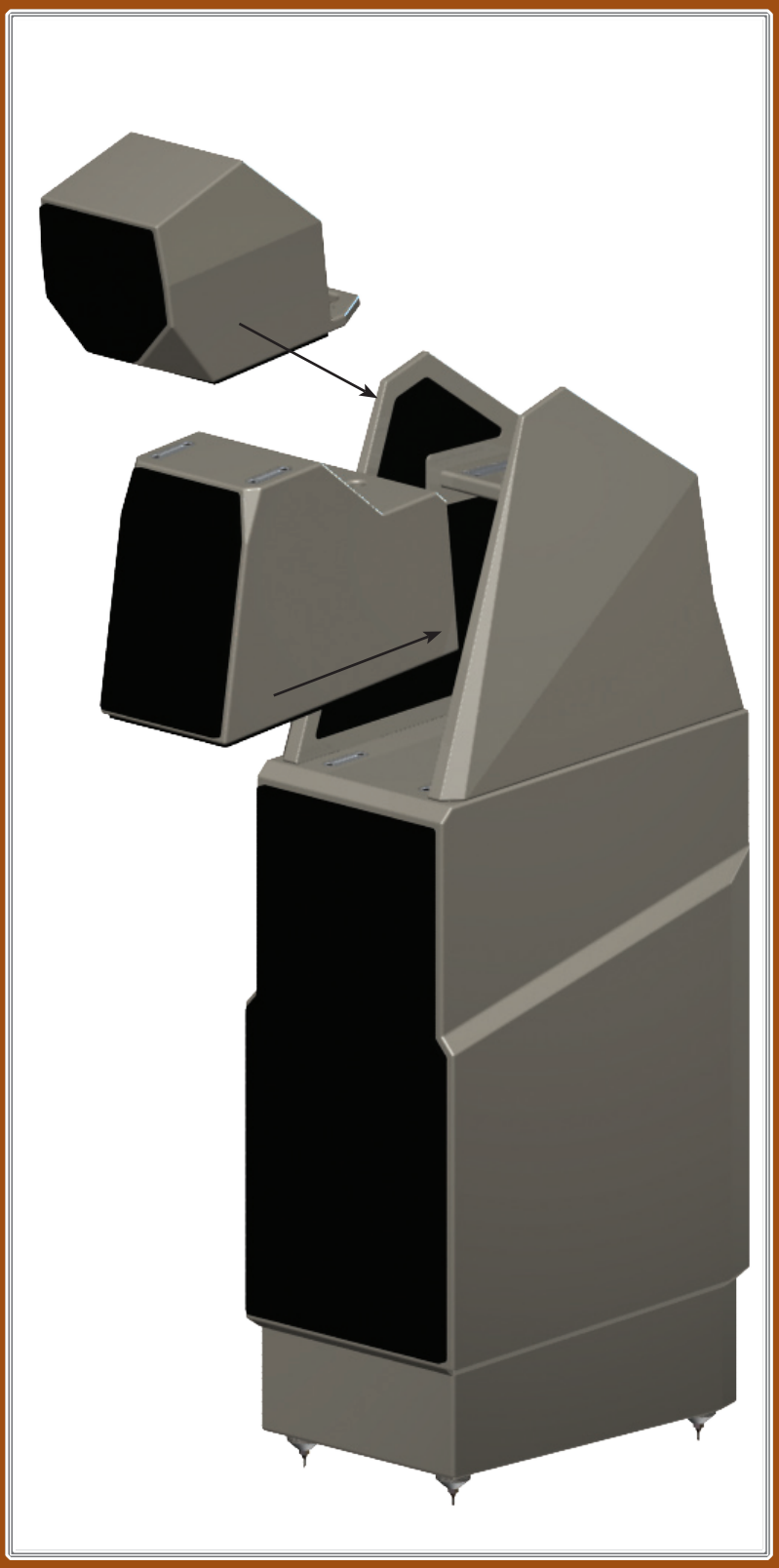

Figure 8 – Install Upper Modules into the Wing Array

Downloaded from www.linephaze.com
- Find specs, manuals and used listings across thousands of audio products.

2. Remove the Propagation Delay Tables from Section 8 in this booklet and place them close by for easy reference.

3. Make sure that you are in your intended listening position.

4. While sitting, have someone measure your ear height from the floor directly below your ear canal. You should be relaxed in your chair, as you would be when listening to music (see Figure 6).

5. Now measure the distance (on the floor) from the point on the floor below your ear to the base of the loudspeaker, as shown in Figure 6.

6. Refer to the Propagation Delay Tables (see Section 8) and locate the corresponding ear height for each module. There are three charts for the Lower Tweeter/Midrange Module, the first (labeled Number 1: Lower Tweeter/Midrange Module Spike Length) is a table determining the rear spike length. The second is a table (labeled Number 2: Lower Tweeter/Midrange Module Block Position) determining the step block location (see Figure 9). The third table (labeled Number 3: Lower Tweeter/Midrange Module Block Step) specifies the step on which the rear spike will rest (see Figure 10).

7. Make a mark on the chart labeled Number 1 "Lower Tweeter/Midrange Module Spike Length" indicating the proper rear spike for this module as determined by the ear height and distance from listening position.

Note: The shortest spikes (labeled A) are always used at the front of all upper modules.

8. Make a mark on the chart labled Number 2, "Lower Tweeter/Midrange Module Block Position" indicating the block location for that module. Set this information aside as you will refer to it in the next section.

9. Make a mark on the labeled Number 3. "Lower Tweeter/Midrange

Downloaded from www.linephaze.com
- Find specs, manuals and used listings across thousands of audio products.

Module Block Step" table indicating the step on which the rear spike the lower module will rest. Set this information aside as you will refer to it in the next section.

10. There are two charts for the Upper Midrange Module, the first (labeled Number 4: Upper Midrange Module Spike Length) is a table determining the rear spike length. The second is a table (labeled Number 5: Upper Midrange Module Spike Detent Location) determining the step block location (see Figure 10).

11. Make a mark on the chart labeled Number 4, "Upper Midrange Module Spike Length" indicating the proper rear spike for this module as determined by the ear height and distance from listening position.

12. Make a mark on the table labled Number Number 5: "Upper Midrange Module Spike Detent Location" indicating the detent in which to rear spike of the Upper Midrange Module will rest.

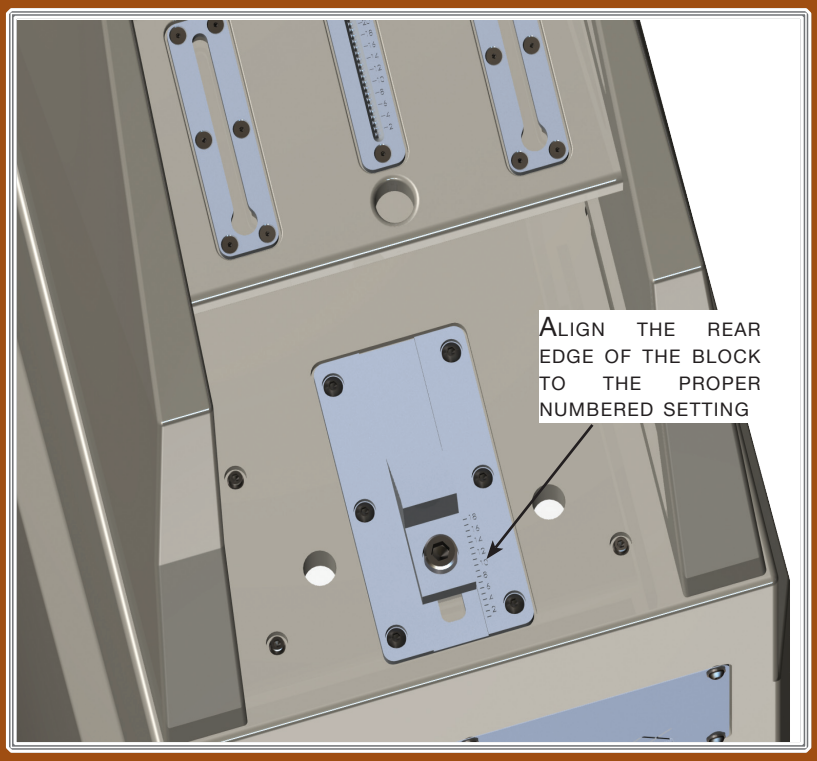

Figure 9 - Slide the Alignment Block to Its Proper Position

Downloaded from www.linephaze.com
- Find specs, manuals and used listings across thousands of audio products.

Section 4.3 – Mounting the Lower Tweeter/Midrange Module

Materials Required

- Correct spikes for the modules. Refer to the MAXX Propagation delay Tables and the procedure in the previous section to determine the correct Aspherical Propagation delay spikes necessary, the Alignment Block position, and the proper step location of the step.

Mounting Procedure

Note: The module's center of gravity will be somewhat forward and unbalanced until the tether bolts are secured. Have an assistant stabilize them while you install rear spikes and bolts.

The front-to-back location of each module, along with the use of the proper length of rear spike of the upper modules, achieves the correct propagation delay and axial response vis-a-vis the listener.

Install the front pair of short (A length) spikes into the bottom of each module (see Figure 7).

Install the Lower Tweeter/Midrange Module

The Lower Tweeter/Midrange Module is installed first. Install the module as follows:

- Refer to table number 1, the Lower Tweeter/

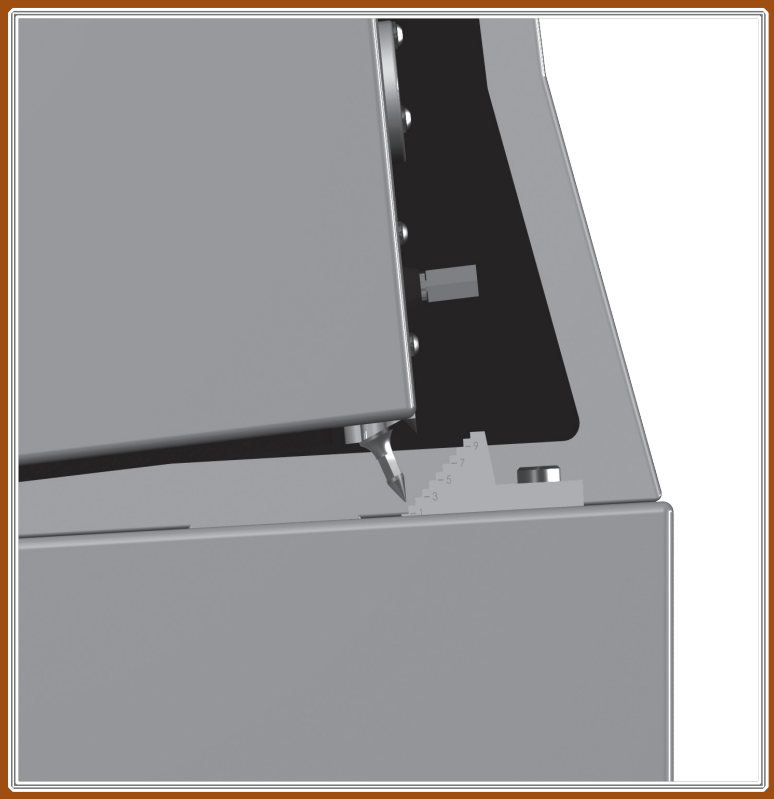

Figure 10 - Position Rear Spike of the Lower Tweeter/Midrange Module into the Proper Block Step

Downloaded from www.linephaze.com
- Find specs, manuals and used listings across thousands of audio products.

Midrange Module Spike Length table and install (if necessary) the appropriate Propagation Delay Spike in the rear of the Lower Tweeter/Midrange Module.

- Refer to the table number 2, the Lower Tweeter/Midrange Module Block Position table. Using the rear edge of the Alignment Block as the guide, align the block to the proper front-to-back setting for this module (see Figure 9). Once the block is in its proper position, lock it down using the 3/8″ Allen wrench.

- With the front spikes pointing down, carefully lower the tweeter/midrange module between the alignment wings and set it on top of the woofer enclosure (see Figure 8). There are alignment tracks that accommodate the spikes.

Take caution not to scratch the painted surface with the alignment spike as you install the Lower Tweeter/Midrange Module.

- Refer to the table number 3, the Lower Tweeter/Midrange Module Block Step table to determine the numbered step in which to rest the rear spike (see Figure 10).

Section 4.4 – Mounting the Upper Midrange Module

- Refer to Chart Number 4 (Section 8), Upper Midrange Module Spike Length, and install the correct propagation delay spike in the rear of the Upper Midrange Module.

- With the front pair of short spikes pointing down, carefully lower the Upper Midrange Module between the alignment wings and set the front two spikes on top of the Lower Tweeter/Midrange module. Align the spikes into the alignment tracks. Install the rear spike by lifting the rear of the Upper Midrange Module and carefully screwing it in.

Downloaded from www.linephaze.com
- Find specs, manuals and used listings across thousands of audio products.

- Refer to table Number 5, the Upper Midrange Module Spike Detent Location, to determine the proper location of the rear spike in its detent (see Figure 11), noting that the position will be different from the Lower Tweeter/Midrange Module.

- With the front spikes pointing down, carefully lower the Upper Midrange Module into the array. There are two front tracks located on top of the Lower Tweeter/Midrange Module; position the front spikes in these tracks. Rest the rear spike in the proper detent (See Figure 11) as determined in the previous step. Make sure that the front spikes stay in the front track so the paint surface does not get scratched.

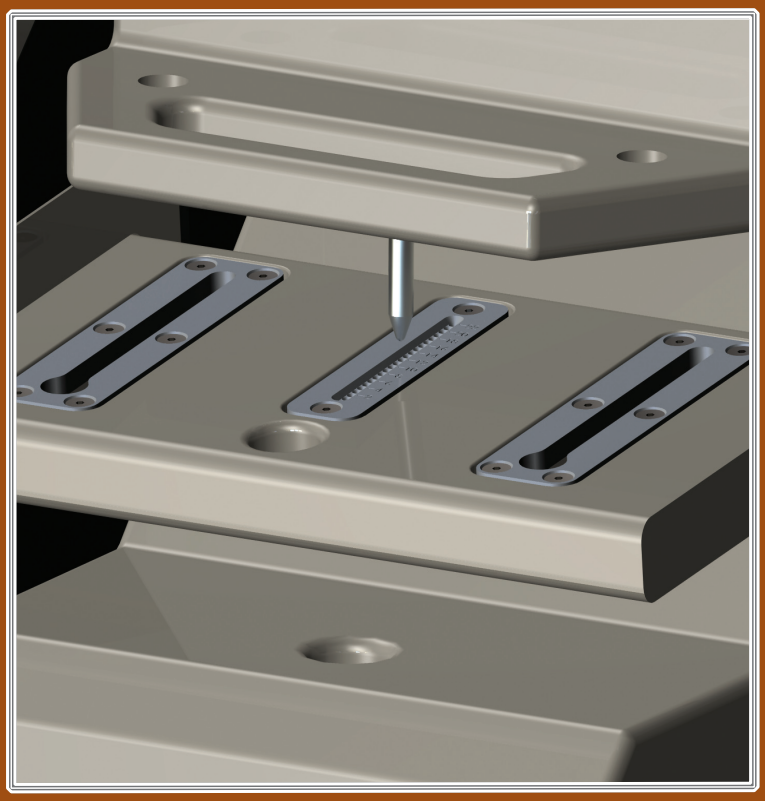

Figure 11 - Spike Position in the Propagation Delay Detent

Section 4.5 – Connecting Upper Modules' Signal Cable

The MAXX uses binding posts that were designed in-house and are manufactured exclusively for Wilson Audio. The design goal was to create a connector with superior overall sound quality, consistency, and longevity.

A note about these connectors: You risk breaking the binding post if they are over-tightened. Use the supplied binding post wrench and tighten until just snug.

The upper range signal cables are labeled so that they can be easily attached to their appropriate module. This is accomplished as follows:

Downloaded from www.linephaze.com
- Find specs, manuals and used listings across thousands of audio products.

- Locate the cable marked "Lower Mid," and connect this cable to the Lower Tweeter/Midrange Module's binding post, which is on the left side (see Figure 12).

- Locate the cable marked "Tweeter," and connect it to the Tweeter's binding post,which is on the right side of the Lower Tweeter/Midrange Module. (See Figure 12).

- Locate the cable marked "Upper Mid." Locate the binding post on the rear of the Upper Midrange Module. Carefully thread the speaker cable up through the hole located in the wing support and through a corresponding hole located on the module support blade just below the speaker terminal (see Figure 12).

Figure 13 - Connect the Cables to the Three Drivers

Downloaded from www.linephaze.com
- Find specs, manuals and used listings across thousands of audio products.

Section 4.6 – Locking Down The Upper Modules

Materials Required

2 - Tether bolt cap nuts for each loudspeaker's Upper Midrange Module.

Installing The Tether Bolt in the Upper Midrange Module

Note: Do not use any tools to tighten the tether cap nuts. Hand tighten only. Over tensioning of the bolts can damage the module.

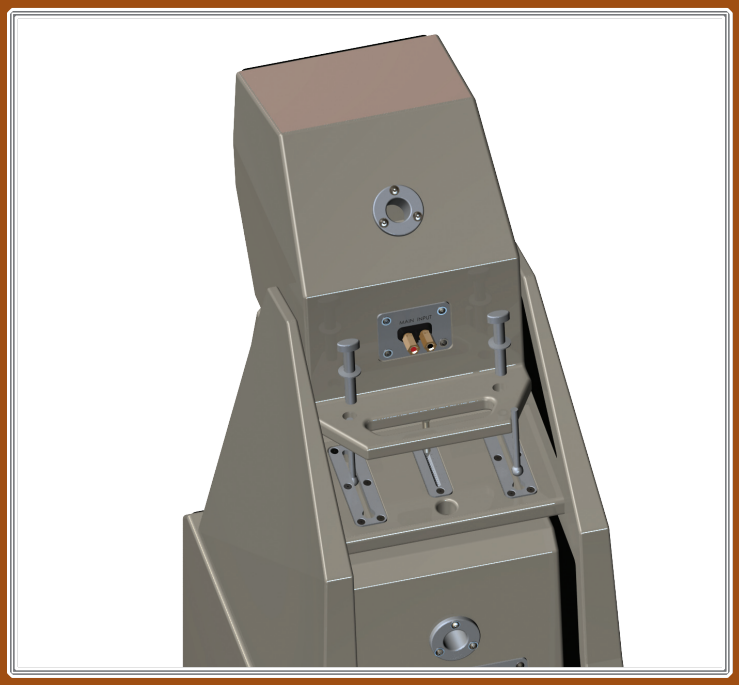

Figure 14 - Install the Tether Bolts in Upper Module

- Insert the Upper Midrange Module tether bolt through the circular access point at the rear of the slot and up through the module wing bolt holes (see Figure 13). The round ball of the bolt is keyed such that it will only fit into the slide tray if its flat surfaces are oriented properly. Slide the bolt forward so it rests vertically beneath the hole. While holding the bolt in place, thread the tether cap nut onto the bolt and loosely tighten it. Install the second tether bolt using the same process. **After the two bolts are secured in place, check to ensure that the alignment spike is still placed properly in its numbered detent.** Symmetrically hand tighten the tether cap nuts.

Section 4.7 – Spike Installation

Note: We strongly recommend that your authorized Wilson Audio installer finalize and fine tune your MAXX. Your dealer is trained in the art of the MAXX installation. If you choose to adjust the MAXX on your own, before spiking your MAXX, refer to Section 2.1 which contains instruction on the Wilson Audio Setup Procedure (WASP).

Downloaded from www.linephaze.com
- Find specs, manuals and used listings across thousands of audio products.

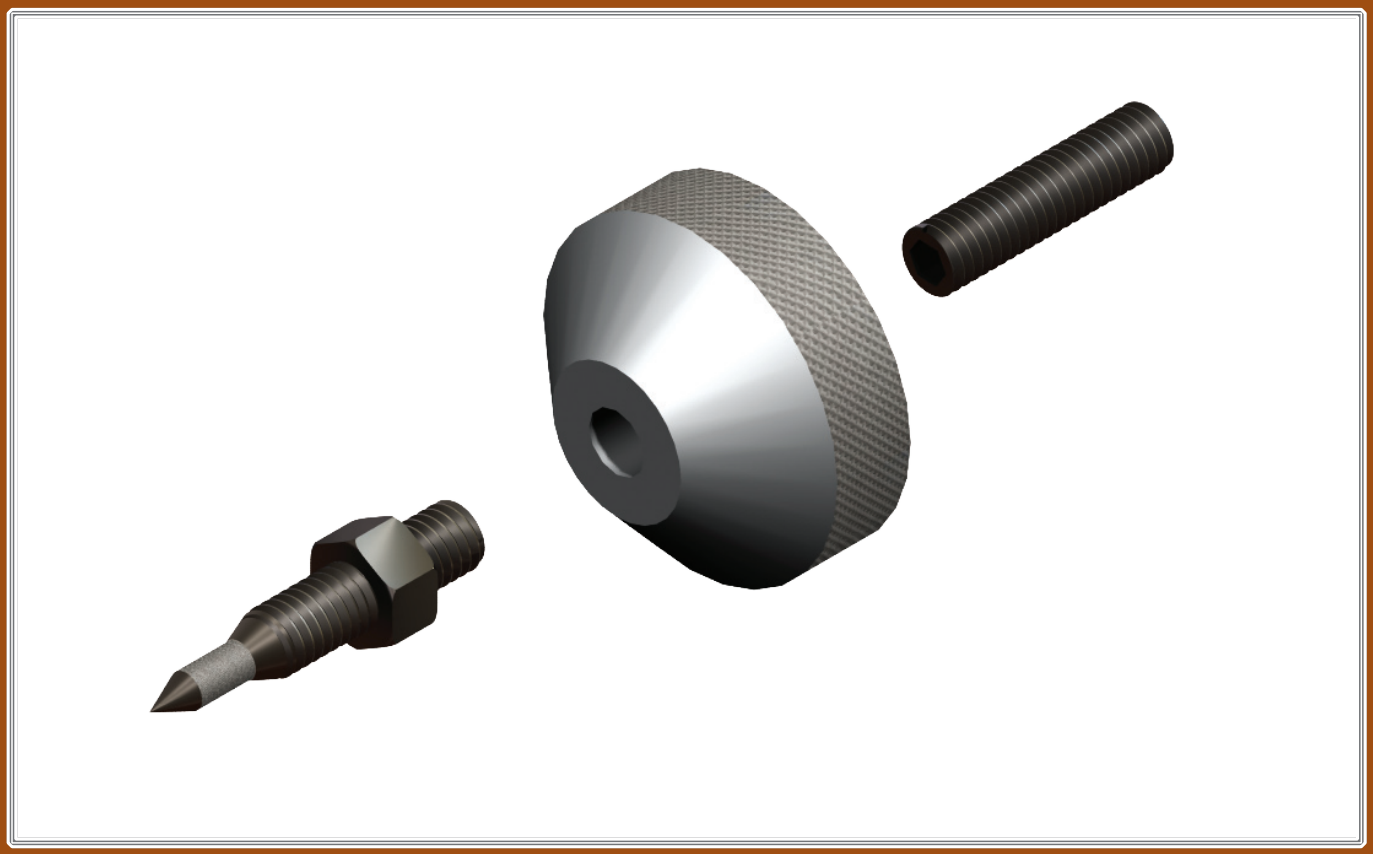

Figure 14 - MAXX Spike and Diode Assembly

Spike Assembly

- Remove the mechanical diodes and move the nut to about two threads from the point. This will allow for greater movement when leveling the loudspeaker system.

- Screw the spikes into the diode until the nut is against the diode. Be careful that the nut does not turn while inserting and threading spikes into the diode.

Note: Do not tighten these assembled spikes. You will need to unscrew them when you level the MAXX 3.

- Place the set screw into the other end of the diode with the Allen head toward the spike. This will ensure that if for any reason you

Downloaded from www.linephaze.com
- Find specs, manuals and used listings across thousands of audio products.

have to remove your MAXX spikes, you will be able to withdraw the set screw safely using the supplied Allen wrench. Screw the set screw into the diode until it meets the spike (see Figure 14).

- Place the assemblies out of the traffic pattern until they are needed during the installation.

Section 4.8 – Using the Lift to Install Spikes

Materials Required

Note: This is a two person job. Do not attempt this by yourself. The MAXXs weigh over 400 LBS and may seriously injure someone if tipped over.

- 8 sets of assembled spikes
- The Wilson Audio Jack
- The jack socket wrench
- Swivel caster wrench

Figure 15 - Using the Wilson Jack

Installation Procedure

- Lock the rear casters to prevent the MAXX from moving.
- Slide the Wilson Audio Jack under the front of the MAXX, centered between the casters, so that the jack's lift bolt is exposed. Place the lift plate so it is positioned about an inch behind the front of the MAXX woofer enclosure (see Figure 15).

Downloaded from www.linephaze.com
- Find specs, manuals and used listings across thousands of audio products.

Note: An assistant should stand to the rear of the MAXX to steady it.

- Attach the wrench to the lift bolt and begin to slowly raise the front of the MAXX by turning the bolt clockwise.

- After the front of the MAXX is high enough (you will need approximately one and half inches of clearance beneath the caster), use the swivel caster wrench to loosen the casters. Remove the casters.

- Insert and screw-in the finished spike assembly. **Hand tighten only!**

Note: Be very careful NOT TO CROSS THREAD the spikes. The base of the MAXX is made of "X" material and is prone to cross threading.

Figure 16 - Carefully Thread the Spike Assembly into the Pre-drilled Holes

Downloaded from www.linephaze.com
- Find specs, manuals and used listings across thousands of audio products.

Note: The spike will go into a different hole than the caster.

- With one person stabilizing the MAXX, lower the MAXX by turning the jack counterclockwise. Note that the MAXX will now sit lower in the front as the spike assembly is shorter than the caster. Use caution.

Note: It is very important, at this point, that an able assistant stabilize the front of the MAXX until the rear spikes are attached and the unit is lowered.

- Repeat the previous process of the caster removal/spike insertion on the opposite side of the enclosure. Then continue the process on the other channel.

Leveling the MAXX

- It is not necessary to use the jack to level the MAXX.

- Place a level on the left to right oriented axis. If it is level, move to

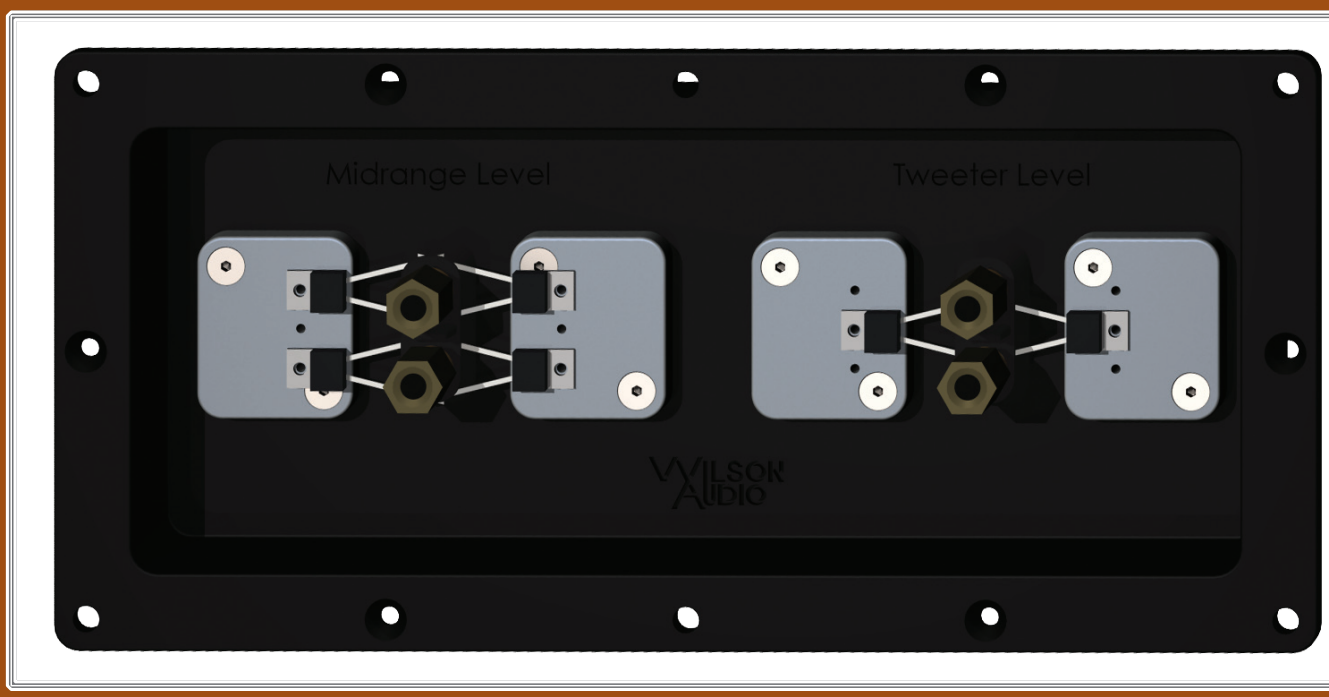

Figure 17 - Resistor Plate Located in the Woofer Enclosure

Downloaded from www.linephaze.com
- Find specs, manuals and used listings across thousands of audio products.

the next step.

- If the bubble shows that the speaker is leaning toward the center of the room, you will have to lengthen one of the inside spikes down toward the floor. If the bubble is leaning toward the outside of the room, you will have to lengthen one of the outside spikes down toward the floor.

- Loosen the nut on the spike and rotate it the appropriate direction to lengthen the spike.

- To find out which spike to lower, grasp the MAXX channel and rock it back and forth. This will identify the spike that is out of level from the other three.

Section 4.9 – Resistors

By removing the back cover on the lower midrange module of your MAXXs, you may gain access to the resistor plate (see Figure 17). These resistors serve several functions.

Note: Only Wilson Audio replacement resistors should be used in your MAXXs. Changing the value or brand of resistor will have a deleterious affect on the sonic performance of your loudspeakers and may void your Wilson Audio Warranty.

Midrange and Tweeter Resistors

The Midrange Level, which consists of two 5.3 ohm resistors in parallel, and Tweeter Level, which consists of two 6.0 ohm resistors in parallel, resistors provide precise level matching for the midrange and tweeter drivers correspondingly. The resistors also act as ultra high quality fuses which open before a driver can be damaged by excess power. See Section 6.0 for details in replacing these resistors in the event one of these resistors is damaged.

Additionally, these resistors can be used to tailor the output of the corresponding driver to overcome tonal balance issues that result from room acoustics.

Downloaded from www.linephaze.com
- Find specs, manuals and used listings across thousands of audio products.

Woofer Damping Resistor

The Woofer Damping resistor affects the way the MAXX's woofers couple to the amplifier. These resistors are pre-installed in the base of the Bass Module and should not be changed.

Section 4.95 – Break-in Period

All audio equipment will sound its best after its components have been broken in for some period of use. Wilson Audio breaks in all woofers and mid-range drivers for a 12 hour period. All drivers are then tested, calibrated, and matched for their acoustical properties. In your listening room, expect 25 to 50 percent of break-in to be complete after two hours of playing music fairly loudly. Ninety percent of break-in is complete after 24 hours of playing. Playing a "disc repeat" overnight can accomplish this task quickly. Wilson Audio recommends chamber music for this task.

Downloaded from www.linephaze.com
- Find specs, manuals and used listings across thousands of audio products.

Downloaded from www.linephaze.com
- Find specs, manuals and used listings across thousands of audio products.

MAXX series 3

Section 5 – Care of MAXX

WILSON

Downloaded from www.linephaze.com
- Find specs, manuals and used listings across thousands of audio products.

Downloaded from www.linephaze.com
- Find specs, manuals and used listings across thousands of audio products.

Section 5.1 – Care of the Painted Finish

Your MAXX Series 3 loudspeakers are hand painted with WilsonGloss™ paint and hand polished to a high luster. While the finish seems quite dry to the touch, final curing and complete hardening takes place over a period of several weeks. To protect the finish of the MAXX during final manufacture, shipment, and setup in your listening room, we have applied a removable layer of protective film over the finish. We recommend that this film be left in place until the speakers are in their final location in your listening room. Once you have determined their final position, remove the film by peeling it off.

Do not leave this film on indefinitely as it may leave impressions on the paint.

It is important that the delicate paint finish of the MAXX be dusted carefully with the dust cloth, which has been provided. We recommend that the following procedure be observed when dusting the speakers:

- Blow off all loose dust.
- Using the special dust cloth as a brush, gently whisk off any remaining loose dust.
- Shake out the dust cloth.

Downloaded from www.linephaze.com
- Find specs, manuals and used listings across thousands of audio products.

- Dust the finish, using linear motions in one direction parallel to the floor. Avoid using circular or vertical motions.

Because the paint requires a period of several weeks to fully cure, we recommend that no cleaning fluids, such as glass cleaners, be used during this initial period of time. When the paint is fully cured, heavy fingerprints and other minor smudges may be removed with a glass cleaner. Always use the dust cloth. Stronger solvents are not recommended under any circumstances. Consult your dealer for further information if required. To maintain the high luster of the finish, periodic polishing may be desired over the years. We recommend a nonabrasive carnauba-based wax and a soft cloth.

Care of the Grill

Periodically, you will want to clean the MAXX's grills. This is best done by using the round brush attachment on a vacuum cleaner hose. Gently vacuum the front surface of the grill. Be careful not to apply too much pressure. Do not use a hard plastic attachment against the grill. The grill cloth is stretched tightly over the grill frame. Too much pressure or use of a hard plastic attachment could cause the grill material to tear, especially in the corners.

Often Wilson speaker owners desire to change the look of their listening room by changing the color of their speaker grills. In addition to basic black, Wilson Audio offers a variety of grill colors to

Downloaded from www.linephaze.com
- Find specs, manuals and used listings across thousands of audio products.

match most WilsonGloss finishes. Contact your local dealer for grill cloth samples or to order replacement grills for your MAXX.

Section 5.2 – Enclosure Construction

At the core of each Wilson Audio loudspeaker design is the knowledge that to achieve the best performance, you must start with the best materials. Here are a few of the elements that contribute to the MAXX Series 3 enclosure's supreme performance.

Material

The MAXX's low frequency enclosure is constructed from a high-density, phenolic resin based composite. This composite meets and exceeds the highest of ANSI test standards for its use, while offering very tight tolerances, high hardness, uniform density, and dimensional stability. In the construction of the MAXX Series 3, Wilson Audio uses two types of composites dubbed "X" material and "M" material. These strategic combinations of X and M materials are used in the two midrange modules, resulting in the most inert enclosures yet produced. X material is used exclusively in the woofer and tweeter modules.

The high hardness of this composite not only offers excellent acoustical properties, but it also provides an ideal surface for painting.

Adhesive

Wilson Audio has conducted exhaustive research into the best adhesives to permanently bond our speaker enclosures. This is an often overlooked element crucial to the proper performance of a loudspeaker. Correct modulus of elasticity, coefficient of thermal expansion, and natural frequency response are just a few of the important elements of adhesives.

A highly cross-linked, thermoset adhesive is used for the construction of the enclosure. It was also chosen for its excellent bond strength, solvent resistance, hardness, and

Downloaded from www.linephaze.com
- Find specs, manuals and used listings across thousands of audio products.

optimum vibrational characteristics.

Conclusion

The combination of the best in composite materials and adhesive technology, provided to us by the leaders in their industries, allows us to design an enclosure with unmatched performance. The MAXX's upper and lower cabinet modules have been designed to minimize vibration and cabinet signature while maintaining an internal acoustical integrity. Wilson's exhaustive research into the effects of materials, enclosure construction strategies, and adhesives has yielded a product that maintains the strictest structural tolerances, durability, and reliability. The MAXX's performance is repeatable and is unaffected by different climatic conditions throughout the world. The MAXX Series 3 redefines the boundaries of what is possible in enclosure design.

Downloaded from www.linephaze.com
- Find specs, manuals and used listings across thousands of audio products.

MAXX series 3

Section 6 – Troubleshooting

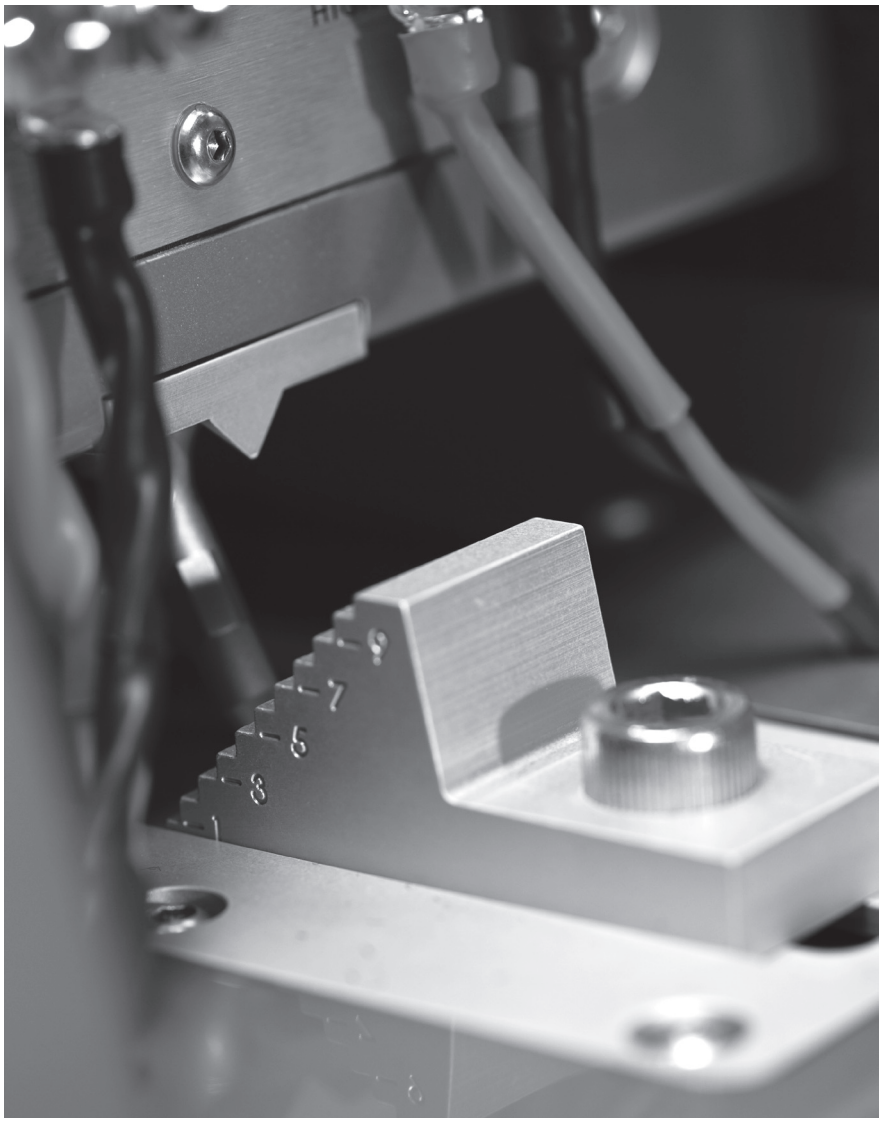

WILSON

Downloaded from www.linephaze.com
- Find specs, manuals and used listings across thousands of audio products.

Downloaded from www.linephaze.com
- Find specs, manuals and used listings across thousands of audio products.

Section 6.1 – Troubleshooting

One channel is not operating:

Check the interconnects from source.

Check the connections on the speaker cables, both at the amplifier and speaker ends. Watch especially for connectors touching each other.

Check the Upper Range Signal Cables. You may have forgotten to connect them, or they may have shorted or come loose during setup.

Imaging is off-center:

Check your connections. A connection to one of the modules may have come loose. When a tweeter or midrange driver is not working, or is out of phase, the MAXX will not "image" properly. Double check your connections for red-to-red and black-to-black.

Play music at a low level and listen to each driver in each channel. You may have a driver that is not operating correctly. If you find a driver that is silent, please go to the "Driver Out" section of this troubleshooting guide.

A chronic lack of bass energy:

Check the input cable connections on your woofer enclosure. If one channel is out of phase (connections reversed), bass will be cancelled.

Driver out or not playing after connections have been verified:

If you have found a driver with no output, move to the rear of this particular loudspeaker.

Remove the back cover exposing the rear resistor plate. Locate the appro-

Downloaded from www.linephaze.com
- Find specs, manuals and used listings across thousands of audio products.

priate resistor. Loosen the binding post and remove the Allen bolt attaching the resistor to its heatsink. Replace the resistor with the supplied matching resistor.

Note: Use only Wilson Audio replacement resistors in your MAXX. These resistors were carefully chosen for the overall sonic and thermal performance.

Plug your amplifier into the wall and turn it on.

Listen to the channel at a low level. The driver should now be operating correctly.

Amplifier shuts off as soon as it is turned on:

Check to see if your speaker cables are properly secured. Look for frayed ends, loose connections, or a conductor contacting the amplifier chassis.

Turn the amplifier off and disconnect it from the AC wall outlet. Disconnect the preamplifier leads to the amplifier. Now turn on the amplifier.

If the problem is solved:

There is likely something wrong with your preamplifier or interconnect. Contact your dealer.

If the problem persists:

Leave the preamp leads disconnected and continue to the next step.

Turn the amplifier off. Disconnect the speaker leads at the main input to the speaker. Now turn on the amplifier.

If the problem is solved:

Call your Wilson Audio dealer. There may be a problem with the crossover

Downloaded from www.linephaze.com
- Find specs, manuals and used listings across thousands of audio products.

	or the speaker's internal wiring.
If the problem persists:	Continue to the next step.
	Turn the amplifier off and disconnect it from the AC wall outlet. Disconnect the speaker cable leads to the amplifier and turn the amplifier on again.
If the problem is solved:	You have a short in your speaker cables. Check for frayed ends, holes (from spike feet), or make sure that your spade lug is not touching the chassis while it is connected to the binding post.
If the problem persists:	Call the dealer where you bought your amplifier. You appear to have a problem with this component.

Downloaded from www.linephaze.com
- Find specs, manuals and used listings across thousands of audio products.

Downloaded from www.linephaze.com
- Find specs, manuals and used listings across thousands of audio products.

MAXX series 3

Section 7 – System Specifications

WILSON

Downloaded from www.linephaze.com
- Find specs, manuals and used listings across thousands of audio products.

Downloaded from www.linephaze.com
- Find specs, manuals and used listings across thousands of audio products.

Section 7.1 – Specifications:

Enclosure Type:

Woofer:	Rear Ported
Upper Midrange:	Rear Ported
Tweeter/Lower Midrange:	Rear Ported (Sealed Tweeter Drive Unit)

Drivers:

Woofers:	One – 13 inch (33.02 cm), One-11 inch (27.94 cm)
Midrange:	Two – 7 inch (17.78 cm)
Tweeter:	One – 1 inch inverted dome (2.54 cm)

Measurements:

Sensitivity:	91 dB @ 2.83V at one meter
Nominal Impedance:	4 ohms, 3 ohms minimal
Minimum Amplifier Power:	15 watts per channel
Frequency Response:	+0, -3 dB 20 Hz - 21.5 kHz Average in-room response

Dimensions:

Height:	63 13/16 inches (172.24 cm)
Width:	16 1/8 inches (40.96 cm)
Depth:	24 1/4 inches (61.60 cm)

System Weight Per Channel:	425 lbs each (193 kg)
System Shipping Weight (approx.):	1190 lbs pair (540 kg)

Downloaded from www.linephaze.com
- Find specs, manuals and used listings across thousands of audio products.

Section 7.2 – MAXX Dimensions

Figure - 26

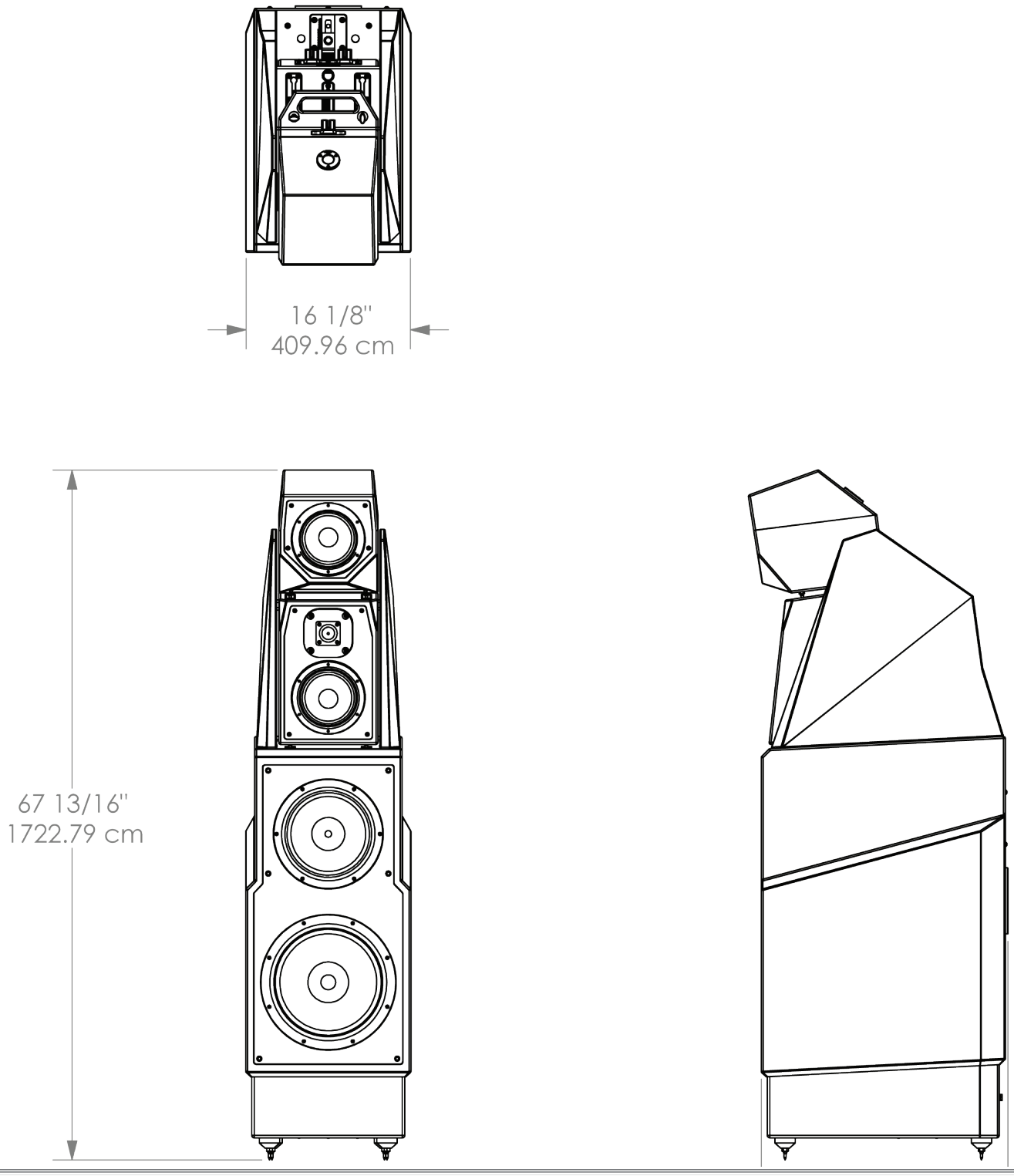

Downloaded from www.linephaze.com
- Find specs, manuals and used listings across thousands of audio products.

MAXX series 3

Section 8 – Propagation delay Tables

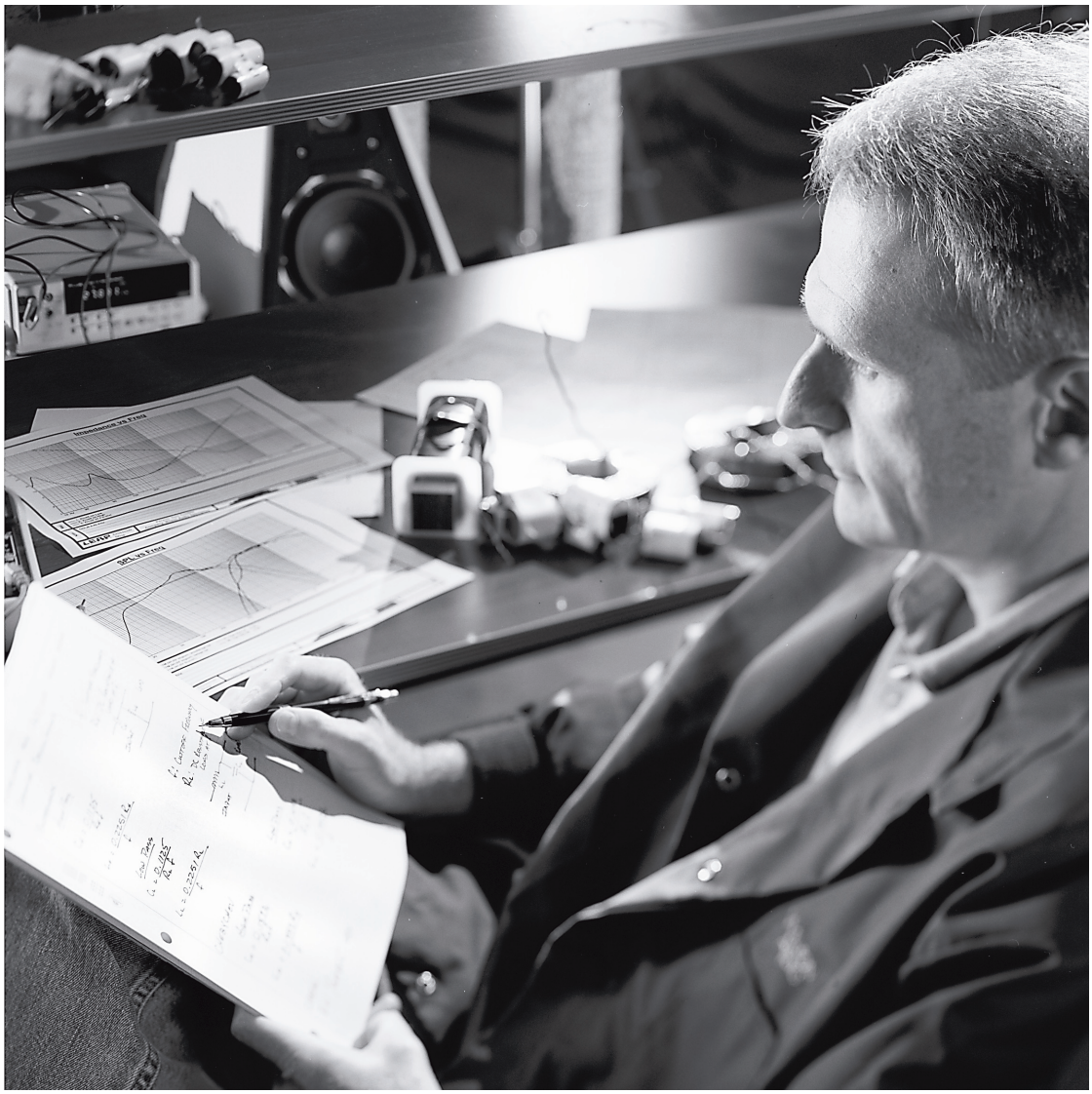

WILSON

Downloaded from www.linephaze.com
- Find specs, manuals and used listings across thousands of audio products.

Downloaded from www.linephaze.com
- Find specs, manuals and used listings across thousands of audio products.

Number 1: Lower Tweeter/Midrange Module Spike Length

	Listening Distance											
Ear Height	8'	9'	10'	11'	12'	14'	16'	18'	20'	22'	24'	26'
48	No Spike	No Spike	No Spike	No Spike	No Spike	No Spike	No Spike	No Spike	No Spike	No Spike	No Spike	No Spike
46	No Spike	No Spike	No Spike	No Spike	No Spike	No Spike	No Spike	No Spike	No Spike	No Spike	No Spike	No Spike
44	2	2	No Spike	No Spike	No Spike	No Spike	No Spike	No Spike	No Spike	No Spike	No Spike	No Spike
42	3	2	2	2	No Spike	No Spike	No Spike	No Spike	No Spike	No Spike	No Spike	No Spike
40	3	3	3	3	2	2	No Spike	No Spike	No Spike	No Spike	No Spike	No Spike
38	3	3	3	3	3	3	2	2	No Spike	No Spike	No Spike	No Spike
36	3	3	3	3	3	3	3	2	2	No Spike	No Spike	No Spike

Number 2: Lower Tweeter/Midrange Module Block Position

	Listening Distance											
Ear Height	8'	9'	10'	11'	12'	14'	16'	18'	20'	22'	24'	26'
48	1	2	3	3.5	4	4.5	5.5	6	6.5	7	7	7.5
46	5	6	6	6.5	7	7.5	8.5	9	8	8.5	8.5	9
44	2.5	3.5	10	9.5	10	9.5	10	10.5	11	10	10	10
42	3	6.5	6	6	11	12.5	12	12	12	11.5	11.5	12
40	7.5	7	6	5.5	9	8.5	14.5	14	14	13	13	13.5
38	10.5	10	9	8	7.5	7	10.5	9.5	15.5	14.5	15	15
36	15	13	12.5	11.5	10.5	10	8	11	10	16	16	15

Downloaded from www.linephaze.com
- Find specs, manuals and used listings across thousands of audio products.

Number 3: Lower Tweeter/Midrange Module Block Step

	Listening Distance											
Ear Height	8'	9'	10'	11'	12'	14'	16'	18'	20'	22'	24'	26'
48	4	4	4	4	4	4	4	4	4	4	4	4
46	7	7	6	6	6	6	6	6	5	5	5	5
44	1	1	9	8	8	7	7	7	7	6	6	6
42	1	3	2	2	10	9	8	8	8	7	7	7
40	4	3	2	1	3	2	10	9	9	8	8	8
38	5	5	4	3	2	1	3	2	10	9	9	9
36	9	7	6	5	4	3	1	3	2	10	10	9

Downloaded from www.linephaze.com
- Find specs, manuals and used listings across thousands of audio products.

Number 4: Upper Midrange Module Spike Length

	Listening Distance											
Ear Height	8'	9'	10'	11'	12'	14'	16'	18'	20'	22'	24'	26'
48	D	D	C	C	C	C	C	B	B	B	B	B
46	D	D	D	D	C	C	C	C	B	B	B	B
44	E	E	D	D	D	C	C	C	C	B	B	B
42	E	E	E	D	D	D	C	C	C	C	C	B
40	F	F	E	E	D	D	D	C	C	C	C	C
38	G	F	E	E	E	D	D	D	C	C	C	C
36	G	F	F	F	E	E	D	D	C	C	C	C

Number 5: Upper Midrange Module Spike Detent Location

	Listening Distance											
Ear Height	8'	9'	10'	11'	12'	14'	16'	18'	20'	22'	24'	26'
48	2	3	4	5	5	6	7	8	8	9	9	9
46	5	6	7	7	8	8	9	9	10	10	10	10
44	9	9	10	10	10	10	11	11	11	11	11	11
42	12	12	12	12	12	13	13	13	13	13	13	13
40	15	15	15	15	15	15	14	14	14	14	14	14
38	19	18	18	17	17	17	16	16	16	15	15	15
36	22	21	21	20	20	19	18	17	17	17	16	16

Downloaded from www.linephaze.com
- Find specs, manuals and used listings across thousands of audio products.

Downloaded from www.linephaze.com
- Find specs, manuals and used listings across thousands of audio products.

MAXX series 3

Section 9 – Warranty Section

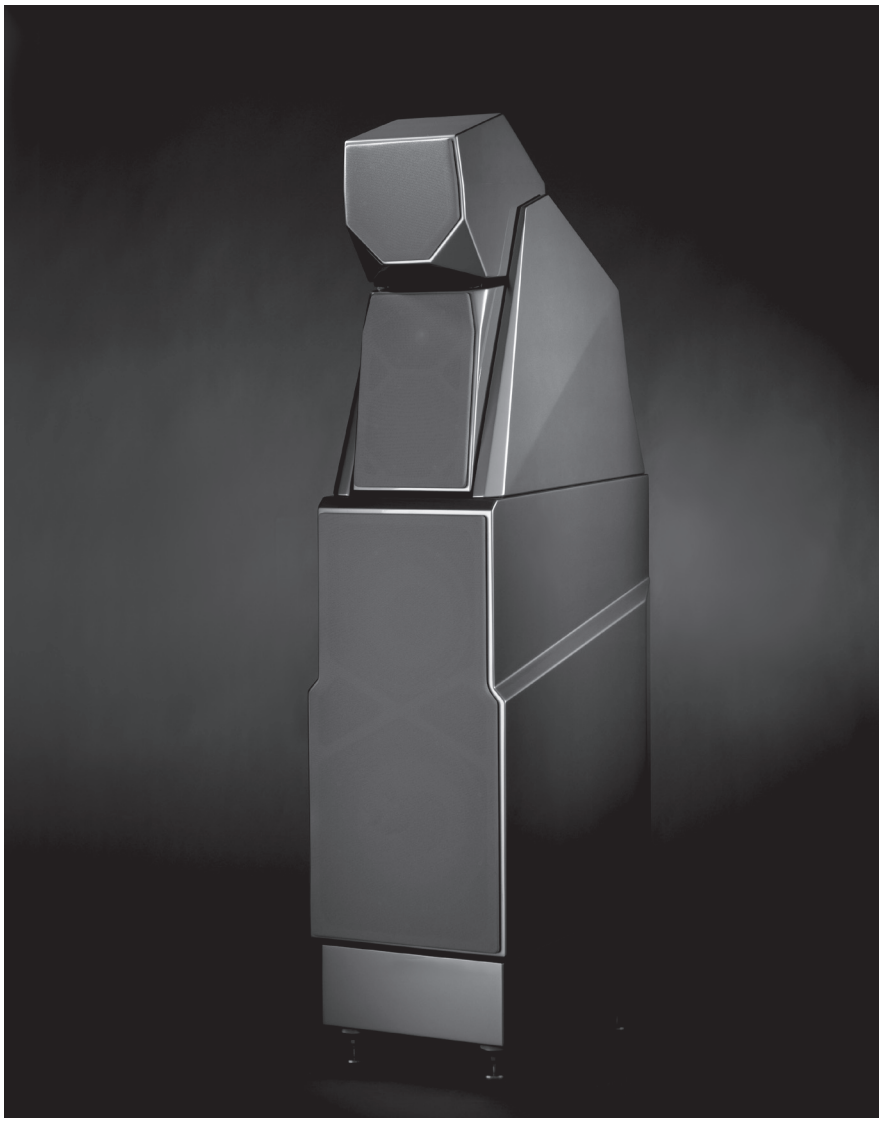

WILSON

Downloaded from www.linephaze.com
- Find specs, manuals and used listings across thousands of audio products.

Downloaded from www.linephaze.com
- Find specs, manuals and used listings across thousands of audio products.

Section 9.0 – Warranty Information

Limited Warranty

Subject to the conditions set forth herein, Wilson Audio warrants its loudspeakers to be free of manufacturing defects in material and workmanship for the Warranty Period. The Warranty Period is a period of 90 days from the date of purchase by the original purchaser, or if both of the following two requirements are met, the Warranty Period is a period of five (5) years from the date of purchase by the original purchaser:

> **Requirement No. 1. No later than 30 days after product delivery to the customer, the customer must have returned the Warranty Registration Form to Wilson Audio;**
>
> **Requirement No. 2. The product must have been professionally installed by the Wilson Audio dealer that sold the product to the customer.**

FAILURE TO COMPLY WITH EITHER REQUIREMENT NO. 1 OR REQUIREMENT NO. 2 WILL RESULT IN THE WARRANTY PERIOD BEING LIMITED TO A PERIOD OF 90 DAYS ONLY.

Conditions

This Limited Warranty is also subject to the following conditions and limitations. The Limited Warranty is void and inapplicable if the product has been used or handled other than in accordance with the instructions in the owner's manual, or has been abused or misused, damaged by accident or neglect or in being transported, or if the product has been tampered with or service or repair of the product has been attempted or performed by anyone other than Wilson Audio, an authorized Wilson Audio Dealer Technician or a service or repair center authorized by Wilson Audio to service or repair the product. Contact Wilson Audio at (801) 377-2233 for information on location of Wilson Audio Dealers and authorized service and repair centers. Most repairs can be made in the field.

Downloaded from www.linephaze.com
- Find specs, manuals and used listings across thousands of audio products.

In instances where return to Wilson Audio's factory is required, the dealer or customer must first obtain a return authorization. Purchaser must pay for shipping to Wilson Audio, and Wilson Audio will pay for shipping of its choice to return the product to purchaser. **A RETURNED PRODUCT MUST BE ACCOMPANIED BY A WRITTEN DESCRIPTION OF THE DEFECT.** Wilson Audio reserves the right to modify the design of any product without obligation to purchasers of previously manufactured products and to change the prices or specifications of any product without notice or obligation to any person.

Remedy

In the event that the product fails to meet the above Limited Warranty and the conditions set forth herein have been met, the purchaser's sole remedy under this Limited Warranty shall be to: (1) contact an authorized Wilson Audio Dealer within the Warranty Period for service or repair of the product without charge for parts or labor, which service or repair, at the Dealer's option, shall take place either at the location where the product is installed or at the Dealer's place of business; or (2) if purchaser has timely sought service or repair and the product cannot be serviced or repaired by the Dealer, then purchaser may obtain a return authorization from Wilson Audio and at purchaser's expense return the product to Wilson Audio where the defect will be rectified without charge for parts or labor.

Warranty Limited to Original Purchaser

This Limited Warranty is for the sole benefit of the original purchaser of the covered product and shall not be transferred to a subsequent purchaser of the product, unless the product is purchased by the subsequent purchaser from an authorized Wilson Audio Dealer who has certified the product in accordance with Wilson Audio standards and requirements and the certification has been accepted by Wilson Audio, in which event the Limited Warranty for the product so purchased and certified shall expire at the end of the original Warranty Period applicable to the product.

Downloaded from www.linephaze.com
- Find specs, manuals and used listings across thousands of audio products.

Demonstration Equipment

Equipment, while used by an authorized dealer for demonstration purposes, is warranted to be free of manufacturing defects in materials and workmanship for a period of five (5) years from the date of shipment to the dealer. Demo equipment needing warranty service may be repaired on-site or, if necessary, correctly packed and returned to Wilson Audio by the dealer at dealer's sole expense. Wilson Audio will pay return freight of its choice. A returned product must be accompanied by a written description of the defect. Dealer owned demonstration equipment sold at retail within two (2) years of date of shipment to the dealer is warranted to the first retail customer to be free of manufacturing defects in materials and workmanship for the same time periods as if the product had originally been bought for immediate resale to the retail customer. Wilson Audio products are warranted for a period of 90 days, unless extended to 5 years, as provided above, by return and filing of completed Warranty Registration at Wilson Audio within 30 days after product delivery to customer and the product was professionally installed by the Wilson Audio Dealer that sold the product to the customer.

Miscellaneous

ALL EXPRESS AND IMPLIED WARRANTIES NOT PROVIDED FOR HEREIN ARE HEREBY EXPRESSLY DISCLAIMED. ANY LEGALLY IMPOSED IMPLIED WARRANTIES RELATING TO THE PRODUCT SHALL BE LIMITED TO THE DURATION OF THIS LIMITED WARRANTY. THIS LIMITED WARRANTY DOES NOT EXTEND TO ANY INCIDENTAL OR CONSEQUENTIAL COSTS OR DAMAGES TO THE PURCHASER.

Some states do not allow limitations on how long an implied warranty lasts or an exclusion or limitation of incidental or consequential damages, so the above limitations or exclusions may not apply to you. This Limited Warranty gives you specific legal rights, and you may also have other rights, which vary from state to state.

Downloaded from www.linephaze.com
- Find specs, manuals and used listings across thousands of audio products.

Downloaded from www.linephaze.com
- Find specs, manuals and used listings across thousands of audio products.