MAXX™ series 2

MAXX Series 2 Owner's Manual

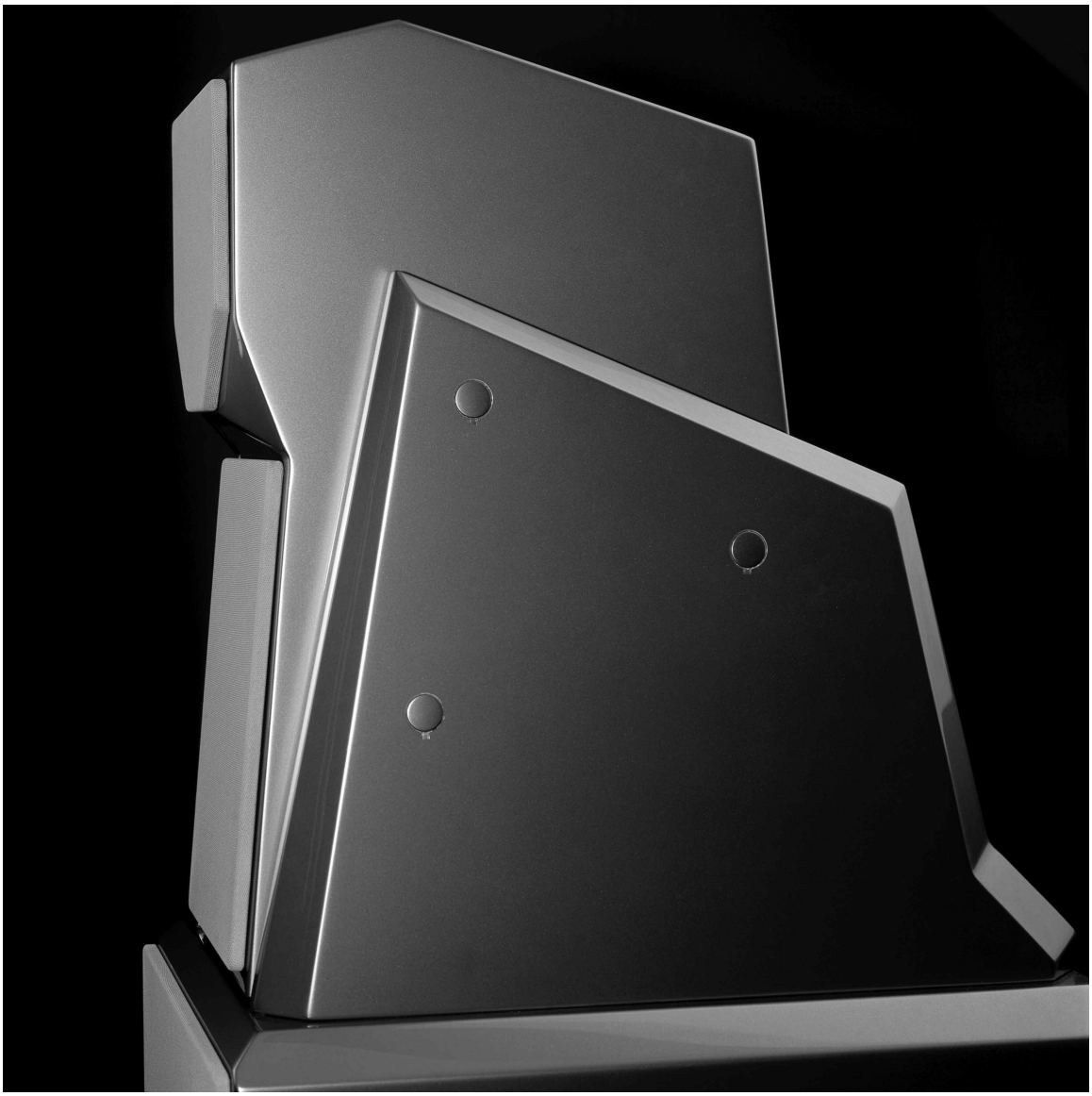

WILSON®

Downloaded from www.linephaze.com
- Find specs, manuals and used listings across thousands of audio products.

Wilson Audio® is a registered trademark of Wilson Audio Specialties, Inc.

Cub®, Sophia®, WATT/Puppy®, MAXX®, Alexandria®, and X-1/Grand SLAMM® are registered trademarks of Wilson Audio Specialties, Inc.

WATCH Center™, WATCH Surround™, and WATCH Dog™ are trademarks of Wilson Audio Specialties, Inc.

This manual was produced by the Wilson Audio Engineering Department in cooperation with Sales and Marketing. The information contained herein is subject to change without notice. Current Revision 2.0. If you are in need of a more recent manual, please contact your dealer.

The information in this manual is the sole property of Wilson Audio Specialties, Inc. Any reproduction, in whole or in part, without the express written permission of Wilson Audio Specialties, Inc., is prohibited. No material contained herein may be transmitted in any form or by any means, electronic or mechanical, for any purpose, without the express written permission of Wilson Audio Specialties, Inc.

Downloaded from www.linephaze.com
- Find specs, manuals and used listings across thousands of audio products.

Table of Contents

Section 1 – In Your Room **7**

Section 1.1 – Room Acoustics **9**

Final Listening Room Setup (Voicing) 9

Zone of Neutrality 9

Section 1.2 – Room Reflections **11**

Slap Echo 11

Standing Waves 13

Comb Filter Effect 14

Section 1.3 – Resonances **15**

Structural Resonance 15

Air Volume Resonance 16

Section 1.4 – Your Room **16**

Room Shapes 16

MAXX In A Dedicated Home Theater 17

Speaker Placement Versus Listening Position 19

Speaker Orientation 20

Summary 20

Section 2 – Initial Preparation **23**

Section 2.1 – Uncrating the MAXX **25**

Initial Check 25

Uncrating the Woofer Modules 25

Uncrating the Upper Array Modules 26

Section 2.2 – Crate Content Checklist **27**

Section 3 – Assembling Your MAXX **31**

Section 3.1 – Initial Assembly **33**

Spike Assembly 33

Upper Module Assembly 33

Alignment Block Installation 35

Section 3.2 – Placement of the Upper Module **35**

Downloaded from www.linephaze.com

- Find specs, manuals and used listings across thousands of audio products.

Section 4 – Group Delay 39

Section 4.1– Geometric Time Domain Alignment.....41

Pulse Alignment 41

Room Setup 41

Alignment Procedure 42

Section 5 – Finishing Up 47

Section 5.1 – Anchoring Upper Module to Fascia 49

Section 5.2 – Wiring Attachments 50

Section 5.3 – Spike Installation 51

Materials Required.....51

Section 5.4 – Leveling the MAXX 52

Section 5.5 – Installing the Painted Hole Covers 52

Section 6 – Care of the MAXX 55

Section 6.1 – Painted Finish 57

Section 6.2 – Break-in Period 58

Section 6.3 – Enclosure Construction 58

Material 59

Adhesive 59

Conclusion 60

Section 7 – Troubleshooting.....63

Section 8 – Specifications 69

Section 9 – Alignment Table.....73

Section 10 – Warranty Information 77

Downloaded from www.linephaze.com
- Find specs, manuals and used listings across thousands of audio products.

Table of Graphics

Figure 1 - Common Room Reflection Problems 15

Figure 2 - Possible Placement within Various Room Shapes.....18

Figure 4 - Upper Module 26

Figure 3 - Woofer Module 26

Figure 5 - Woofer Paw Assembly.....33

Figure 6 - Installing spikes into the Upper Module 34

Figure 7 - Installation of the Alignment Block 34

Figure 8 - Installation of the Upper Module 35

Figure 9 - Place the Rear Spike on a Step of the Alignment Block 36

Figure 10 - Rotation of Upper Module 42

Figure 11 - Listening Distance and Bar Height.....43

Figure 12 - Alignment Block Step Configuration 44

Figure 13 - Alignment Assembly with Standard Spike.....44

Figure 14 - Alignment Assembly with Two Inch Spike.....45

Figure 15 - Securing the Upper Module 49

Figure 16 - Attaching Upper Wires 50

Figure 17 - Installing the Spikes 51

Figure 19 - Fascia Holes.....53

Figure 18 - Fascia Hole Cover.....53

Downloaded from www.linephaze.com

- Find specs, manuals and used listings across thousands of audio products.

Downloaded from www.linephaze.com
- Find specs, manuals and used listings across thousands of audio products.

MAXX™ series 2

Section 1 – In Your Room

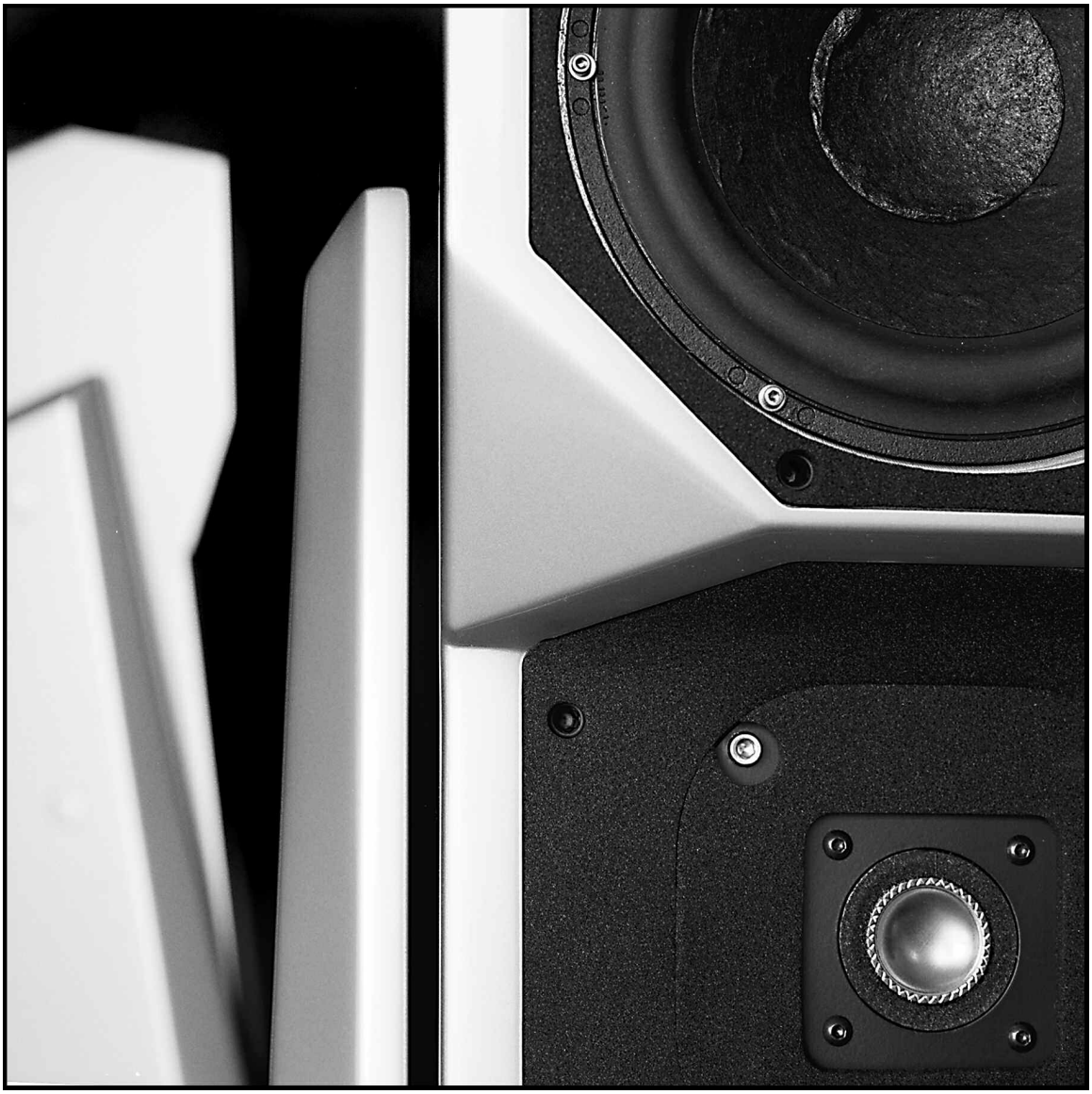

WILSON®

Downloaded from www.linephaze.com
- Find specs, manuals and used listings across thousands of audio products.

Downloaded from www.linephaze.com
- Find specs, manuals and used listings across thousands of audio products.

Section 1.1 – Room Acoustics

You are surely excited about setting up your MAXX® loudspeakers and doing some listening, but before you begin we would like to discuss some of the important room acoustical information that will help you set up your loudspeakers properly. Please read this section before you uncrate your MAXXs.

Final Listening Room Setup (Voicing)

The MAXX® is unmatched in its ability to reproduce the musical event. It is truly state of the art. However, room acoustics and boundary interactions affect the sound of a loudspeaker to such a large degree that poor setup can seriously degrade your enjoyment of even the finest loudspeaker.

Therefore, we offer the following section, which will present some guidelines on room acoustics and their interactions with loudspeakers. While we will also outline some detailed suggestions on the setup of the MAXX, we strongly suggest that you have your local Wilson Audio dealer perform the final speaker "voicing" with you. Wilson dealers are specially trained in setting up Wilson loudspeakers and will ensure that you realize the full value of your purchase.

Zone of Neutrality

The "Zone of Neutrality" is an area in your room where the speakers will sound most natural. This location is where the speakers interact the least with adjacent room boundaries. It is important to have a clear working space while determining the Zone of Neutrality.

The following is a simple method to locate the Zone of Neutrality within your listening environment:

Downloaded from www.linephaze.com
- Find specs, manuals and used listings across thousands of audio products.

1. Stand against the wall BEHIND the location where you intend to position your MAXXs. Speaking in a moderately loud voice and at a constant volume, project your voice out into the room. Your voice will have an overly heavy, "chesty" quality because of your proximity to the rear wall.

2. While speaking, slowly move out into the room, progressing in a direction parallel to the sidewall. It is helpful to have another listener seated in the listening position to assist you during this process. Listen to how your voice "frees up" from the added bass energy imparted by the rear wall boundary. Also notice that your voice is quite spatially diffuse (to your assistant, your voice will sound spatially large and difficult to localize) as you begin to ease away from the rear wall.

3. At some point during your progression forward into the room, you will observe a sonic transition in your voice; it will sound more tonally correct and less spatially diffuse (your assistant can now precisely localize the exact origin of your voice). When you hear this transition, you have entered the inner edge of the Zone of Neutrality. Place a piece of tape on the floor to mark this location. Although it will vary from room to room, the zone in most rooms begins between two and a half to three feet from the rear wall.

4. Continue to walk slowly away from the rear wall. After some distance, usually one to two feet past the first piece of tape, you will begin to hear your voice lose focus and appear to reflect (echo) in front of you. This is caused by the return of the room's boundary contribution; your voice is now interacting with the opposite wall. At the point where you begin to hear the reflected sound of your voice, you have reached the inner edge of the Zone of Neutrality. Place a piece of tape on the floor and mark this location. The distance between the "inner" and "outer" edge tape marks is usually between eight inches (for small, interactive rooms) and three feet (for large, more neutral rooms).

5. Now position yourself against the side wall perpendicular to the intended speaker location. Stand between the two tape marks. Using the same procedure as above,

Downloaded from www.linephaze.com
- Find specs, manuals and used listings across thousands of audio products.

begin moving into the room toward the opposite sidewall, progressing between the two pieces of tape. As above, listen for the point in the room where your voice transitions from bass-heavy and diffuse to neutral. Mark this point with tape. Continue your progression until there is an obvious interaction with the opposite wall in front of you and mark this point with tape. The four pieces of tape now form a rectangle that establishes the Zone of Neutrality for the loudspeaker located on that side of the room. Using the four marks as your guide, tape an outline to define the boundaries of the rectangle.

6. Repeat this process for each speaker location individually. These are your Zones of Neutrality, one for each channel.

Theoretically, the Zone of Neutrality for any room runs like a path, parallel to the walls all around the room. Adjacent to very large windows and open doors, the outer edge of the Zone of Neutrality moves closer to the wall and becomes wider. If you were to extend the inner and outer boundaries of the Zone for the sidewalls and the front wall (behind the speakers), they would intersect. After you complete this procedure for the other loudspeaker, you will now have two rectangles, one on the floor on either side of the room.

Section 1.2 – Room Reflections

Slap Echo

Probably the most obnoxious form of reflection is called "slap echo." With slap-echo, primarily midrange and high frequency sounds reflect off of two parallel hard surfaces. The sound literally reverberates back and forth until it is finally dissipated over time. You can test for slap echo in any room by clapping your hands sharply in the middle of the room and listening for the characteristic sound of the echo in the midrange. Slap echo destroys the sound quality of a stereo system in two ways:

Downloaded from www.linephaze.com
- Find specs, manuals and used listings across thousands of audio products.

- It adds harshness to the upper midrange and treble by storing time-domain smearing energy.
- It destroys the delicate phase relationships, which help to establish an accurate sound stage.

Slap echo is a common acoustical problem in the typical domestic listening room because most of these rooms have walls with a hard, reflective nature, only occasionally interrupted by curtains, wall art, or drapes. The best (but least practical) solution to eliminate slap echo is nonparallel walls. This is because, rather than support slap-echo, nonparallel walls allow the sound to diffuse. This approach can be accounted for during the construction process. For existing rooms, slap echo can also be controlled entirely by the application of absorptive materials to the hard surfaces. These are absorptive materials that can be used to ameliorate slap echo:

- Sonex®
- Airduct board
- Cork panels
- Large ceiling to floor drapes
- Carpeting to wall surfaces

In many domestic listening environments, heavy stuffed furnishings reduce slap echo somewhat. Unfortunately, their effectiveness is not predictable. Diffusers are sometimes also used to very good subjective effect, particularly in quite large rooms. Sound absorbent materials such as described above will alter the tonal characteristic of the room by making it sound "deader," less "bright and alive," and "quieter." Soundtrack effects will be more localized. However, over-damping the room can render reproduced sound that is lacking in

Downloaded from www.linephaze.com
- Find specs, manuals and used listings across thousands of audio products.

musical involvement and "aliveness."

Diffusers, on the other hand, do not affect the tonal balance characteristic of the room as much. Placed properly, diffusers create a smoother and more open sound. Some diffusers, due to their construction, create narrow midrange peaks and suck-out the warmth region. Do not use diffusers on the wall behind the speakers or on the sidewalls directly beside the speakers. It is our experience that all of these room treatment devices should be used judiciously.

Standing Waves

Another type of reflection phenomenon is "standing waves." Standing waves cause the unnatural boosting or accentuation of certain frequencies, typically in the bass, to be found at certain discreet locations in the room. These locations differ according to room dimension and size. A room generating severe standing waves creates difficulty in setup. In these rooms, the speaker will sound radically different as it is moved around. The effects of standing waves on a loudspeaker's performance are primarily in the areas listed.

- Tonal balance
- Resolution of low-level detail
- Soundstaging

Standing waves are more difficult to correct than slap echo because they tend to occur at a lower frequency. Absorbent materials, such as Sonex, are ineffective at controlling reflections in the bass region. Moving speakers about slightly in the room is, for most people, their only control over standing waves. Sometimes a change of placement of as little as two or three inches can dramatically alter the tonal balance of a small system.

Fortunately, minor low frequency standing waves are well controlled by positioning ASC tube traps in the corners of the room. Very serious low frequency accentuation usually

Downloaded from www.linephaze.com
- Find specs, manuals and used listings across thousands of audio products.

requires a custom-designed bass trap system.

Low frequency standing waves can be particularly troublesome in rooms constructed of concrete or brick. These materials trap the bass in the room unless it is allowed to leak out of the room through windows and doors.

In general, placement of the speaker in a corner will excite the maximal number of standing waves in a room and is to be avoided for most direct radiator, full-range loudspeaker systems. Some benefit is achieved by placing the stereo pair of loudspeakers slightly asymmetrically in the listening room. This is so the standing waves caused by the distance between one speaker and its adjacent walls and floors are not the same as the standing wave frequencies excited by the dimensions in the other channel.

Comb Filter Effect

The comb filter effect is a special type of standing wave noticeable primarily at higher frequencies and shorter wavelengths.

Acoustical comb filtering occurs when sound from a single source, such as a loudspeaker, is directed toward a microphone or listener from a distance. The first sound to reach the microphone is the direct sound, followed by a delayed, reflected sound. At certain frequencies, cancellation occurs because the reflected sound lags in phase relative to the direct sound. This cancellation is most apparent where the two frequencies are 180 degrees out of phase. Further, there is augmentation at other frequencies where the direct and the reflected sounds arrive in phase. Because it is a function of wavelength, the comb filter effect will notch out portions of the audio spectrum at regular, octave-spaced intervals. Subjectively, comb filter effect evidences itself as follows:

- Added roughness to the sound
- Reduction of harmonic richness

Downloaded from www.linephaze.com
- Find specs, manuals and used listings across thousands of audio products.

Section 1.3 – Resonances

Resonance in listening rooms is generally caused by two sources:

- Structures within the listening room.
- The volume of air itself within the listening room.

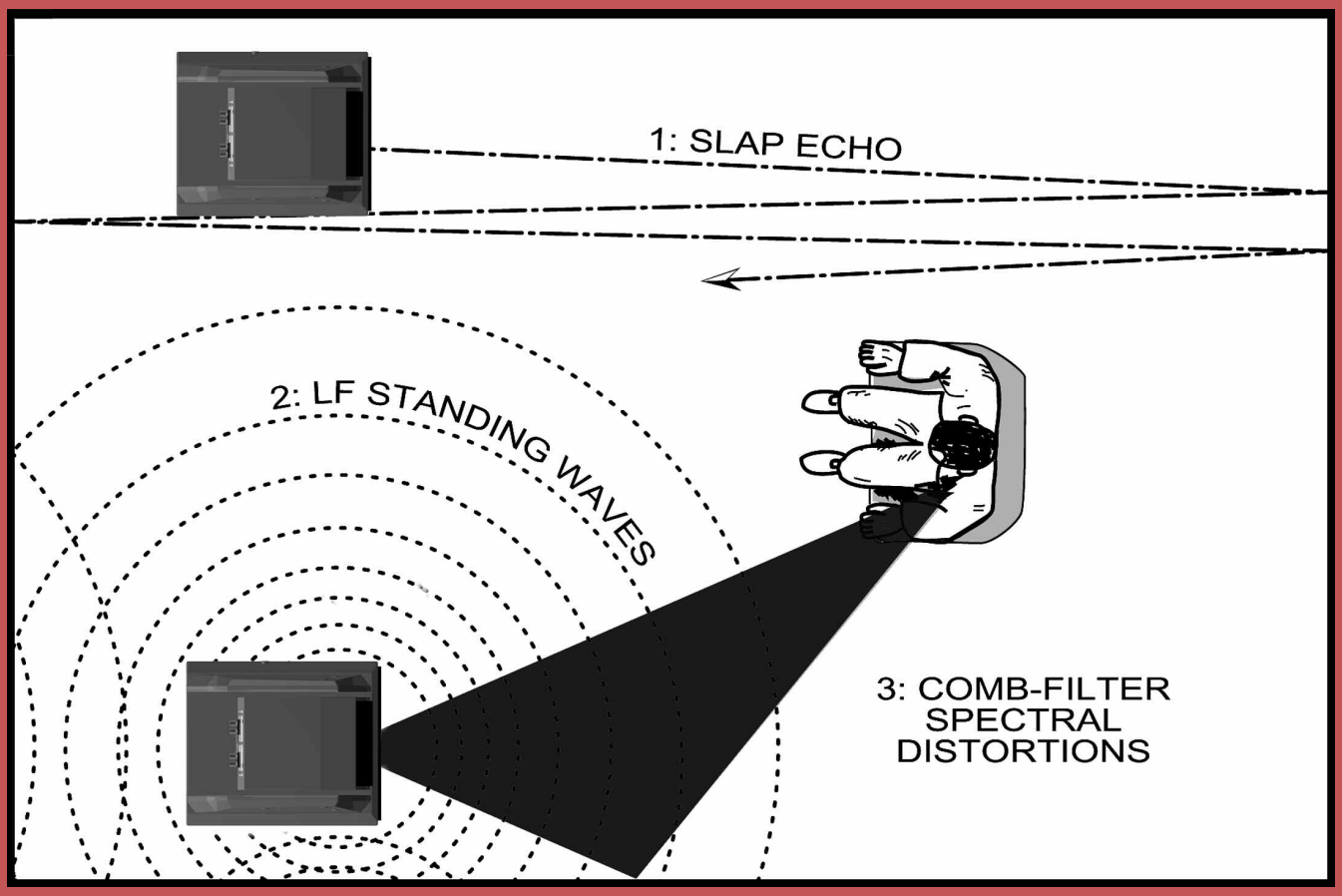

FIGURE 1 - COMMON ROOM REFLECTION PROBLEMS

Structural Resonance

Structural resonances are familiar to most people as buzzes and rattles, but this type of resonance usually only occurs at extremely high volume levels and is usually masked by the music. In many wood frame rooms the most common type of structural resonance problem is "booming" of walls and floors. You can test for these very easily by tapping the wall with the palm of your hand or stomping on the floor. Most rooms exhibit mid-bass "boom"

Downloaded from www.linephaze.com
- Find specs, manuals and used listings across thousands of audio products.

when struck. The loudspeaker playing in the room also excites these resonances. To give you an idea of what the perfect wall would sound like, imagine rapping your hand against the side of a mountain. Structural wall resonances generally occur in the low to mid-bass frequencies and add a false fullness to the tonal balance. They, too, are more prominent at louder levels, but their contribution to the sound of the speaker is more progressive. Rattling windows, picture frames, lampshades, etc., can generally be silenced with small pieces of caulk or with blocks of felt. However, short of actually adding additional layers of sheet rock to flimsy walls, there is little that can be done to eliminate wall resonances.

Air Volume Resonance

The volume of air in a room will also resonate at a frequency determined by the size of that room. Larger rooms will resonate at a lower frequency than will smaller rooms. Air volume resonances, wall panel resonances, and low frequency standing waves combine to form a low frequency coloration that exhibits itself when music plays in this frequency region. At its worst, it is a grossly exaggerated fullness, which tends to obscure detail and distort the natural tonal balance of the speaker system.

Occasionally, however, there is just enough resonance to give a little added warmth to the sound – an addition some listeners prefer. Tube traps manufactured by the ASC Corporation are effective in reducing some of this low frequency room coloration. Custom designed bass traps, such as perforated Helmholtz resonators, provide the greatest degree of low frequency control.

Section 1.4 – Your Room

Room Shapes

Standing waves are pressure waves propagated by the interaction of sound and opposing parallel walls. This interaction creates patterns of low and high acoustical pressure

Downloaded from www.linephaze.com
- Find specs, manuals and used listings across thousands of audio products.

zones that accentuate and attenuate particular frequencies. Those frequencies are dependent on room size and dimension.

There are three basic shapes for most rooms: square, rectangular, and L-shaped (see Figure 2).

A perfectly square room is the most difficult room in which to set up speakers. By virtue of its shape, a square room is the perfect medium for building and sustaining standing waves. These rooms heavily influence the music played by loudspeakers, greatly diminishing the listening experience.

Long, narrow, rectangular rooms also pose their own special acoustical problems for speaker setup. They have the ability to create several standing wave nodes, which will have different standing wave frequency exaggerations depending on where you are sitting. Additionally, these long rooms are often quite lean in the bass near the center of the room. Rectangular rooms are still preferred to square rooms because, by having two sets of dissimilar length walls, standing waves are not as strongly reinforced and will dissipate more quickly than in a square room. In these rooms, the preferred speaker position for spatial placement and midrange resolution would be on the longer walls. Bass response would be reinforced by speaker placement on the short walls.

In many cases, L-shaped rooms offer the best environment for speaker setup. Ideally, speakers should be set up along the primary (longest) leg of the room. They should fire from the end of the leg (short wall) toward the L, or they should be along the longest wall. In this way, both speakers are firing the same distance to the back wall. The asymmetry of the walls in L-shaped rooms resists the buildup of standing waves (see Figure 2).

MAXX In A Dedicated Home Theater

Home theaters can be organized many different ways. Some use rows of couches. Others use rows of multiple chairs.

Downloaded from www.linephaze.com
- Find specs, manuals and used listings across thousands of audio products.

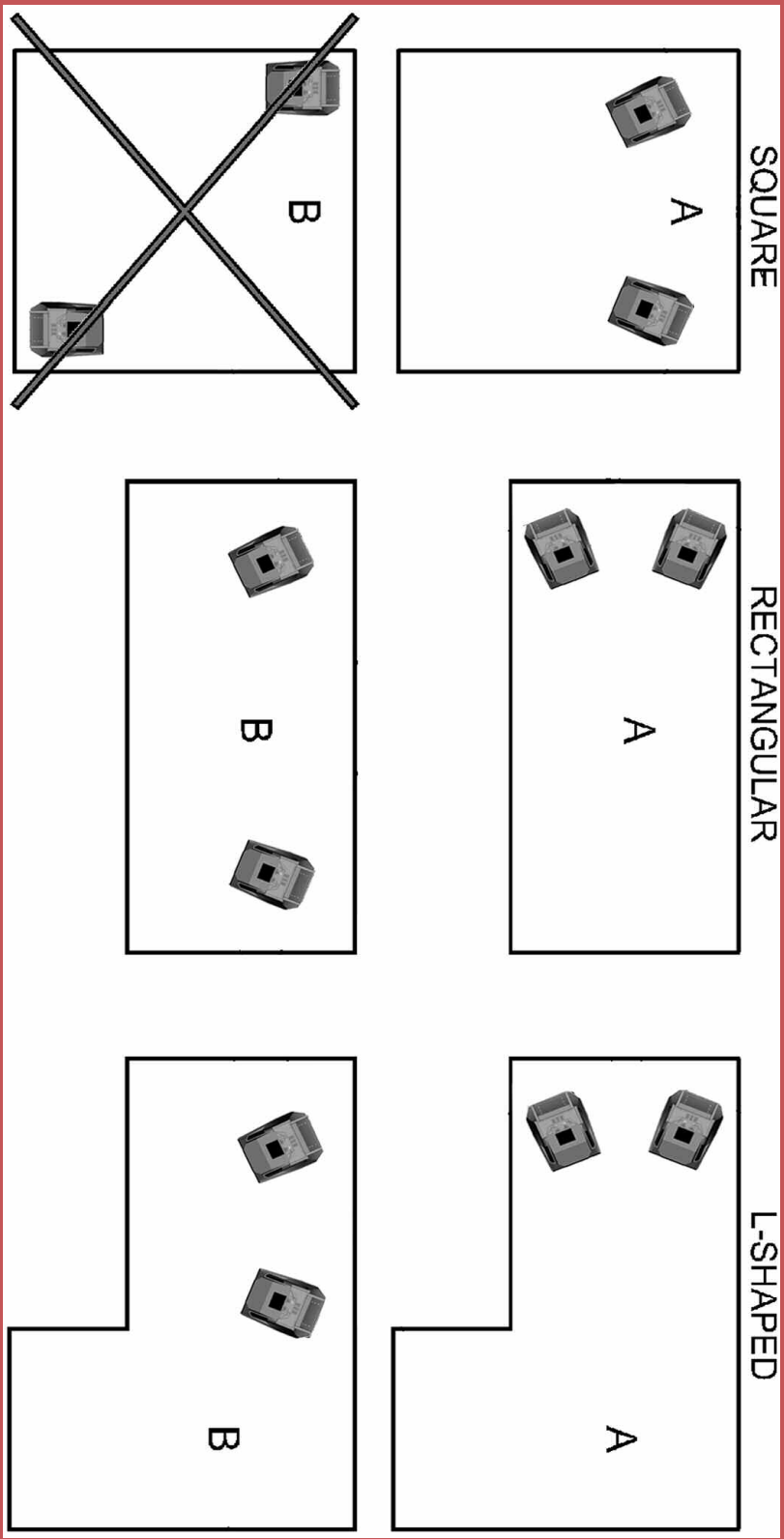

Figure 2 - Possible placement within various room shapes

Downloaded from www.linephaze.com
- Find specs, manuals and used listings across thousands of audio products.

In addition to watching movies, most users want to listen to two-channel music at the highest quality possible. It is desirable, therefore, to choose a single optimum seating position in a home theater and build the rest of the seating positions around this position.

If your optimum position is located on a couch, you should center the loudspeakers on the center position of the couch.

If the seating area consists of multiple rows of chairs, the second row should be optimized for the best sound quality. Odd numbers of chairs arranged in rows work best as this will allow a single chair to be positioned in the center. This approach will also provide the best overall sound for the greatest number of seats.

Speaker Placement Versus Listening Position

The location of your listening position is as important as the careful setup of your MAXX speakers. The listening position should ideally be no more than 1.1 to 1.25 times the distance between the tweeters on each speaker. Therefore, in a long, rectangular room of 12' x 18', if the speaker tweeters are going to be 9' apart, you should be sitting 9'11'' to 11'3'' from the speaker. This would be more than halfway down the long axis of the room.

Many people place the speakers on one end and sit at the other end of the room. This approach will not yield the finest sound. Carefully consider your listening position. Our experience has shown that any listening position that places your head closer than 14" from a room boundary will diminish the sonic results of your listening.

Decide where you want your favorite listening position to be. Please remember that your MAXXs will fill almost any room with the most beautiful sound available. Because the group delay is adjustable on the MAXX, if you take care in placing your new speakers, you will optimize the MAXX's performance in your room.

Downloaded from www.linephaze.com
- Find specs, manuals and used listings across thousands of audio products.

Speaker Orientation

Speaker placement and orientation are two of the most important considerations in obtaining superior sound. The first thing you need to do is eliminate the sidewalls as a sonic influence in your system. Speakers placed too close to the sidewalls will suffer from a strong primary reflection. This can cause out-of-phase cancellations, or comb filtering, which will cancel some frequencies and change the tonal balance of the music. A good place to start is with the speakers about 18" from each wall and, if you need to move them relative to the side wall, move them away from the wall, not closer.

A very important aspect of speaker placement is how far from the back wall to place the speakers. The closer a loudspeaker is to the back wall, the more pronounced the low bass energy and centering of the image will be. However, this comes at a definite reduction in stage size and bloom as well as a deterioration of upper bass quality. You must find the proper balance of these two factors, but remember, if you are partial to bass response or air and bloom, do not overcompensate your adjustments to maximize these effects. Overcompensated systems are sometimes pleasing in the short-term, but long-term satisfaction is always achieved through proper balance.

The MAXX is designed for maximum phase coherence and pulse replication accuracy when each speaker is aimed directly at the listener or microphone. Thus, your MAXX should be "toed in." In other words, the listener, when seated in the listening position looking forward with his/her head in a rested position, should just barely see the surface of the inner side of each MAXX. Toeing in the speakers provides meaningful improvements in resolution of low-level detail in the midrange as well as appreciable improvements in sound staging performance.

Summary

In summary, for optimal tonal balance accuracy, resolution of low level detail, and

Downloaded from www.linephaze.com
- Find specs, manuals and used listings across thousands of audio products.

soundstaging performance, the MAXX should be positioned as outlined in this section. Ideally, the speakers should not be positioned too far from the listener if maximum resolution of low-level detail is required. If possible, the speakers should be positioned out into the room, slightly asymmetrically vis a vis the side and rear walls. The speakers should be "toed in" toward the listener, preferably so that the listener, at his seated position, can barely see the surface of the inner side of the MAXX as he/she faces the speaker. It is recommended that a distance of two to three feet, and possibly more, be maintained between the MAXX and the rear walls and that a distance of at least two feet be maintained between the front panel of the MAXX and reflective side walls. Depending on the room, judicious use of sound absorbent materials will reduce the space requirement.

By following the guidelines in this manual, your new MAXX loudspeakers can provide you with a lifetime of pure music reproduction.

Downloaded from www.linephaze.com
- Find specs, manuals and used listings across thousands of audio products.

Downloaded from www.linephaze.com
- Find specs, manuals and used listings across thousands of audio products.

Section 2 – Initial Preparation

Downloaded from www.linephaze.com
- Find specs, manuals and used listings across thousands of audio products.

Downloaded from www.linephaze.com
- Find specs, manuals and used listings across thousands of audio products.

Note: You will have two Bass Modules as well as two Upper Modules to unpack. The two modules will need to be separated into right and left channels. Clear out two spaces, one for your left and one for your right channels. Place the ODD numbered modules in the LEFT channel section and the EVEN in the RIGHT channel section.

Section 2.1 – Uncrating the MAXX

Initial Check

The MAXX is shipped in three wooden crates. Upon receiving these crates, please check their condition. If any of the crates are damaged, please report it to the shipping company immediately for insurance verification.

Tools Required:

- Metal shears
- Variable speed, reversible electric drill
- Phillips head drive bit

Uncrating the Woofer Modules

A minimum of two strong adults is required to set up the system. Locate the two largest crates labeled "Woofer Modules." These contain the woofer enclosures and are the first components of the system to unpack (see Figure 3).

Note: These two woofer enclosures are very heavy and care should be taken to prevent injury.

To uncrate the woofer:

1. Open the top of each crate and determine the side where the casters are connected to the bottom of the woofer module.

2. Remove the packing material from between the casters and set the crate up so that

Downloaded from www.linephaze.com
- Find specs, manuals and used listings across thousands of audio products.

the casters on the woofer are toward the floor.

3. While one person holds the crate, the other person should roll the woofer enclosure out of the crate. Be very careful not to scratch the module during this process.

4. Finally, move the woofer cabinets over to the "Zone of Neutrality" as determined by the Wilson Audio setup procedure. If you have not yet performed this room analysis, please refer to Section 1.0 of this manual.

Reminder: Place the odd serial numbered woofer on the LEFT and the even numbered module on the RIGHT.

5. Remove the empty woofer crates from the room.

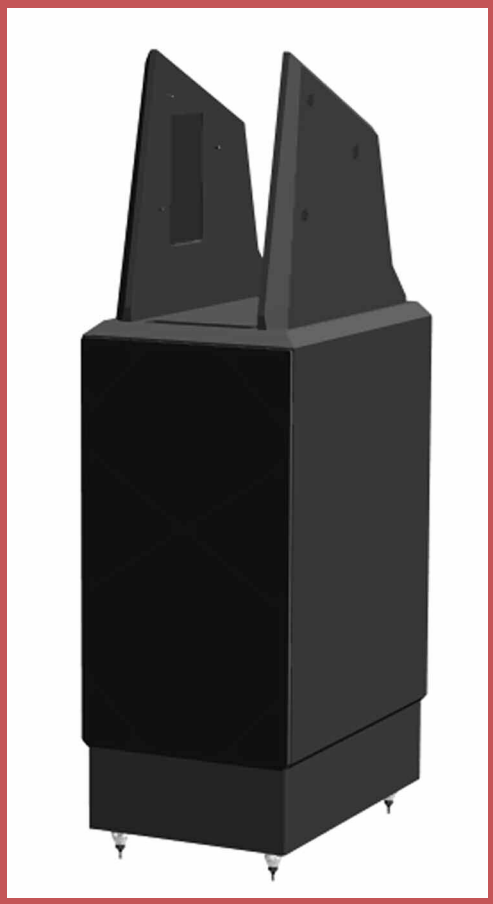

Figure 3 - Woofer Module

Uncrating the Upper Array Modules

1. Locate the crate labeled "Upper Modules." Both Upper Modules are packed in this single crate. Remove the left and right upper modules from the crate (see Figure 4). It is very important to ensure that each of the modules are matched to corresponding Woofer Module by serial number. The serial tags are located on the rear of each. Be very careful

Figure 4 - Upper Module

Downloaded from www.linephaze.com
- Find specs, manuals and used listings across thousands of audio products.

in unpacking the modules to avoid chipping the finish.

2. Stage these items away from traffic flow.

3. Remove the empty crates from the room.

Section 2.2 – Crate Content Checklist

Now that you have everything unpacked, you can inventory your items.

1 - Owner's manual

1 - Warranty registration

2 - Upper mid grills

2 - Lower mid grills

2 - Bass module grills

2 -Bass Modules (left & right channel)

2 - Upper Modules (left & right channel)

8 - Spikes, with nuts

8 - Woofer Paws

8 - Brass spike pads

4 - Upper Module "A" alignment spikes

2 - Upper Module rear alignment spikes

2 - Alignment Blocks (installed)

Downloaded from www.linephaze.com
- Find specs, manuals and used listings across thousands of audio products.

2 - 1/2" Alignment Block Allen bolt (installed)

1 - Caster wrench

8 - 3/8"-16 x 1 1/2" setscrews

12 - Nylon-tipped setscrews (installed in fascia)

1 - 9/16" Combo wrench

1 - 3/16" Long-arm Allen wrench

1 - 5/32" Allen wrench

1 - 3/32" Allen wrench

1 - 1/8" Allen wrench

1 - 3/8" Allen wrench

1 - 1/2" Binding post wrench

2 - Polishing cloths

16 - Painted hole caps

2 - 5.8 ohm resistors (high-current bundle)

2 - 4.2 ohm resistors

2 - 21.2 ohm resistors (installed - domestic version only)

2 - 13.5 ohm resistor (installed - international "E" version only)

Note: After set up of the system, keep the shipping crates in case of future shipping needs.

Downloaded from www.linephaze.com
- Find specs, manuals and used listings across thousands of audio products.

Downloaded from www.linephaze.com
- Find specs, manuals and used listings across thousands of audio products.

Downloaded from www.linephaze.com
- Find specs, manuals and used listings across thousands of audio products.

MAXX™ series 2

Section 3 – Assembling Your MAXX

WILSON®

Downloaded from www.linephaze.com
- Find specs, manuals and used listings across thousands of audio products.

Downloaded from www.linephaze.com
- Find specs, manuals and used listings across thousands of audio products.

Section 3.1 – Initial Assembly

Spike Assembly

- Locate the spike assembly. On the spike, move the nut to about two threads from the point. This will allow for greater movement when leveling the loud-speaker system.

- Screw the spikes into the diode until the nut is against the diode. Be careful that the nut does not turn while inserting and threading spikes into the diode.

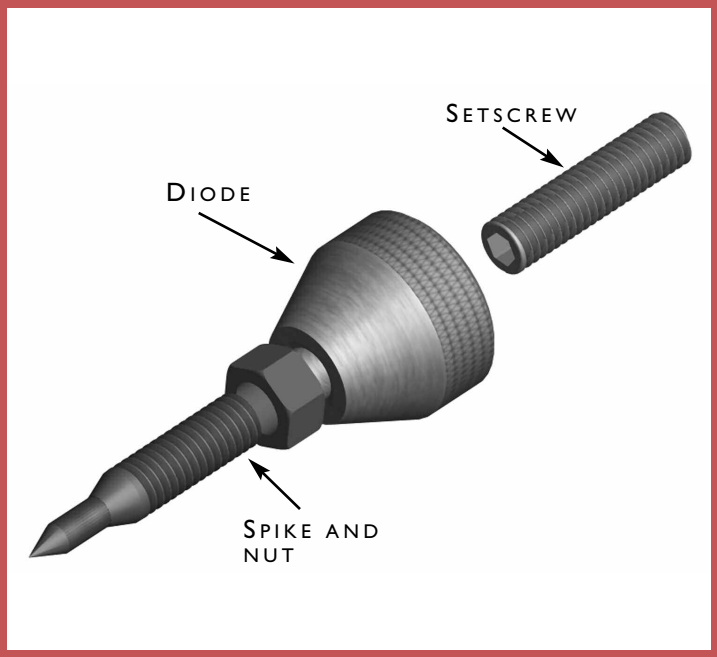

FIGURE 5 - WOOFER PAW ASSEMBLY

Note: Do not tighten these assembled spikes. You will need to unscrew them when you level the MAXXs.

- Place the setscrew into the other end of the diode with the Allen head toward the spike. This will ensure that if for any reason you have to remove your MAXX spikes, you will be able to withdraw the setscrew safely using the supplied Allen wrench. Screw the setscrew into the diode until it meets the spike (see Figure 5).

- Place the assemblies out of the traffic pattern until they are needed during the installation.

Upper Module Assembly

The upper module requires only the installation of the front "A" spikes (see Figure 6 on page 34). The spikes screw into the bottom of the upper module as shown in Figure 6

Downloaded from www.linephaze.com
- Find specs, manuals and used listings across thousands of audio products.

below. The spikes should be screwed in all the way, until they are hand tight. Do not over tighten spikes. This figure also shows the 2" alignment spike installed in the rear alignment plate. Do not install the 2" alignment spike at this time.

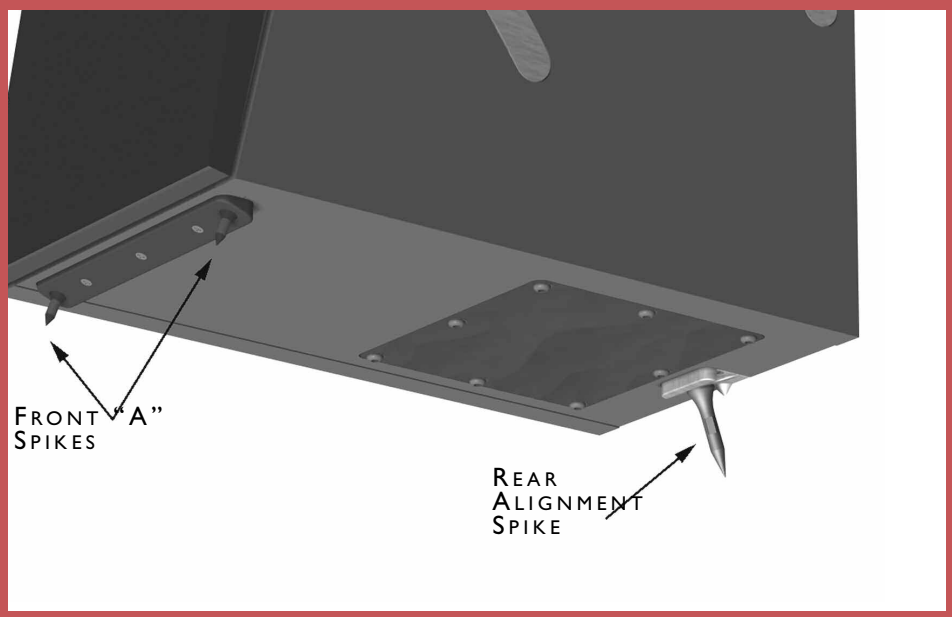

Figure 6 - Installing spikes into the Upper Module

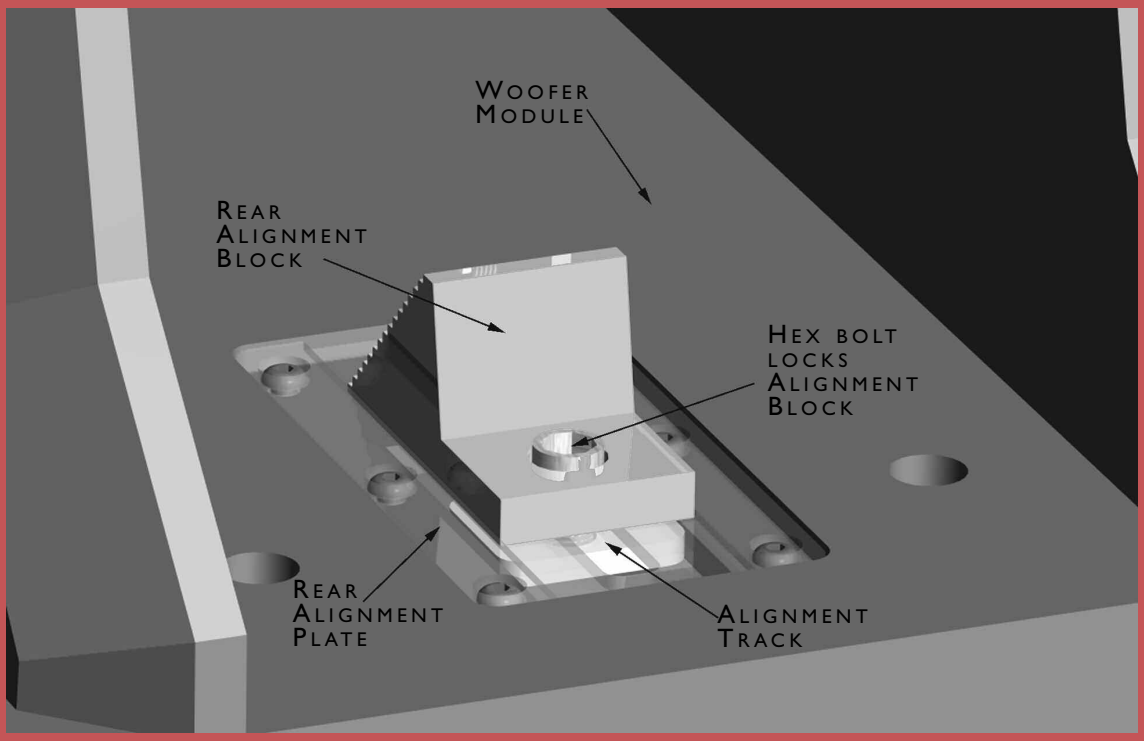

Figure 7 - Installation of the Alignment Block

Downloaded from www.linephaze.com
- Find specs, manuals and used listings across thousands of audio products.

Alignment Block Installation

The alignment block is used to set the final position of the upper module. The MAXX is shipped with the alignment block attached to the woofer enclosure. Ensure the block is mounted as follows:

- Place the alignment block into the channel of the alignment plate (See Figure 7).
- Position the hole at the back of the alignment block over the threaded alignment nut.
- Loosely tighten the Hex bolt.

Section 3.2 – Placement of the Upper Module

The next step in the instal-

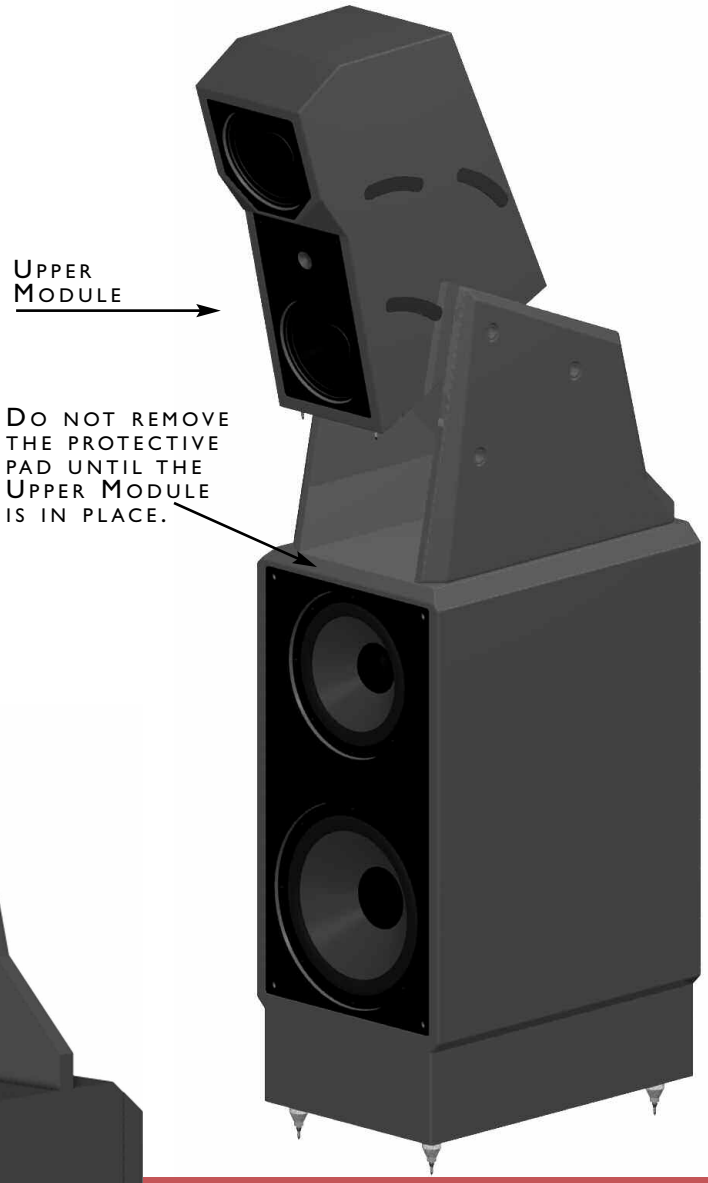

Figure 8 - Installation of the Upper Module

Downloaded from www.linephaze.com
- Find specs, manuals and used listings across thousands of audio products.

lation is to place the upper module onto the woofer cabinet.

Note: Placement of the upper module requires two people.

1. Loosen the large anchor bolt located on the Alignment Assembly so that it slides freely.

Note: A pad has been installed over the front bevel, above the woofers, to protect this area when installing the Upper Module. Do not remove this pad until the Upper Module is in place (See Figure 8).

2. With one person holding the front of the Upper Module, the other the rear, carefully slide the Upper Module between the fascias from the front of MAXX.

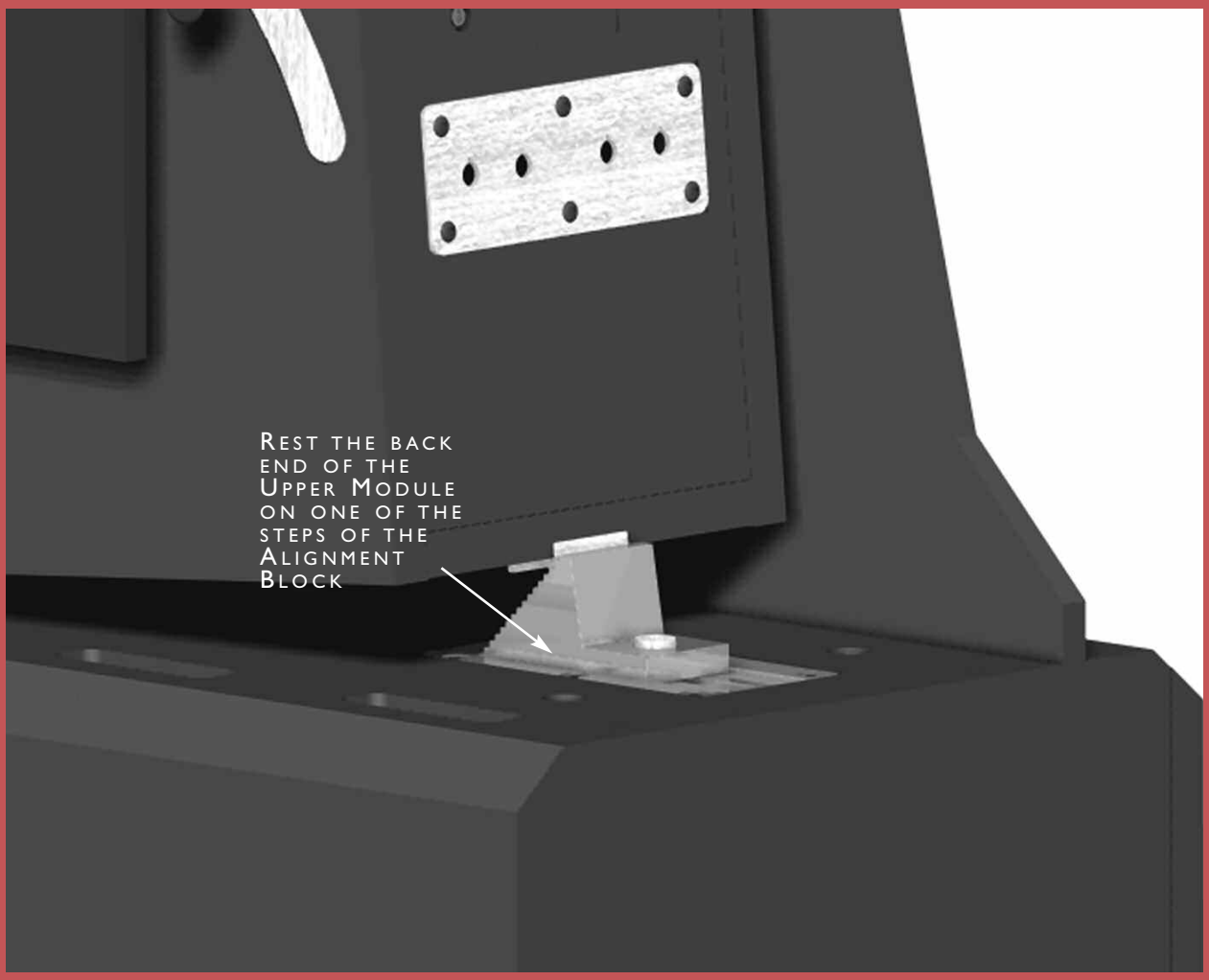

Figure 9 - Place the rear spike on a step of the Alignment Block

Downloaded from www.linephaze.com
- Find specs, manuals and used listings across thousands of audio products.

3. Set the front of the module down so that the front spikes are resting within the triangle indents on the front alignemnt plate.

4. Set the back of the Upper Module down, placing the Standard Spike on one of the steps in the Alignment Block. (See Figure 9.)

5. Carefully nudge the Upper Module toward the front of the MAXX, making sure the front two spikes are resting in the front of its captive hole. Make sure the module is also centered horizontally between the fascia blades.

Note: When installing the Upper Module, take care to avoid contact with the painted surface on the woofer cabinet.

Downloaded from www.linephaze.com
- Find specs, manuals and used listings across thousands of audio products.

Downloaded from www.linephaze.com
- Find specs, manuals and used listings across thousands of audio products.

Section 4 – Group Delay

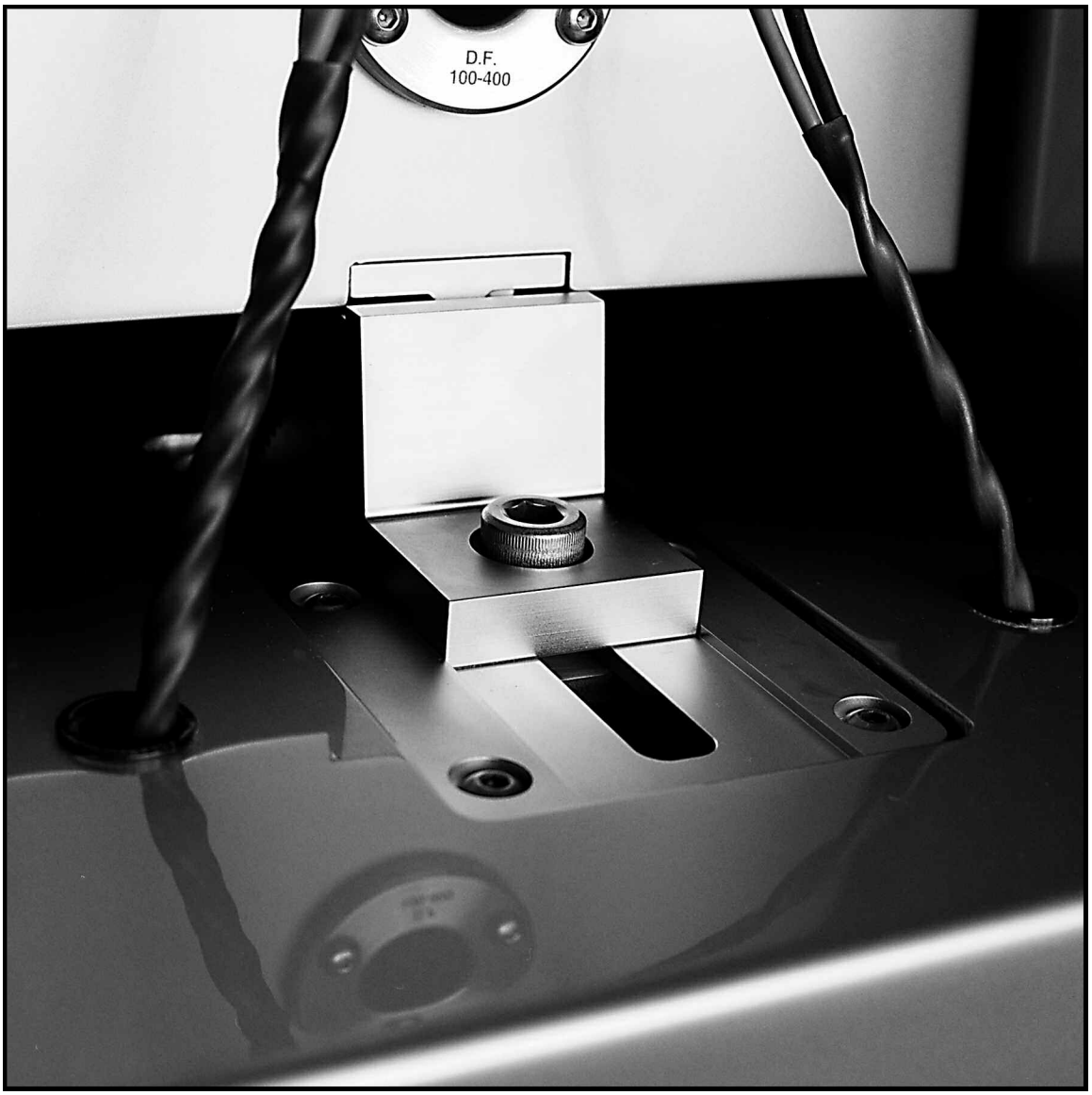

Downloaded from www.linephaze.com
- Find specs, manuals and used listings across thousands of audio products.

Downloaded from www.linephaze.com
- Find specs, manuals and used listings across thousands of audio products.

In order to realize the capabilities of the MAXX®, we strongly recommend that you have it installed by a trained Wilson Audio installer. Your dealer will have a person trained in the art of the MAXX installation. If you choose to do this installation yourself, here are some guidelines to assist you. These guidelines come from many years of experience and should be followed closely.

Section 4.1– Geometric Time Domain Alignment

First, place the woofer modules in the zone of neutrality as determined by the procedure outlined in Section 1.0. Final setup and tuning will follow the assembly of your MAXXs.

Materials Required:

- Tape measure
- Known listening position (see Section 1.4)
- MAXX Group Delay Alignment Table from Section 9

Pulse Alignment

Group delay alignment accuracy of the MAXX has been established and verified by Wilson Audio. The table used in this section is a result of this testing.

Room Setup

The MAXX system allows for different listening distances (away from the speakers) and listening ear heights (measured distances from the floor to your ear). The phase delay correction in MAXX is achieved through the rotation of the upper module (see Figure 10). The rotation is accomplished by placing the upper module on a given alignment step. The higher the step, the greater the rotation. This adjustment, unique to Wilson loudspeakers, ensures that the time domain properties of the MAXX are correct for your installation. For each distance/ear height combination there is a unique alignment geometry.

Downloaded from www.linephaze.com
- Find specs, manuals and used listings across thousands of audio products.

To make correct in-home set up of the MAXX possible without test equipment, Wilson Audio has measured the correct geometric time domain alignment for different distance/ear height combinations. This information is provided in the Alignment Tables in Section 9. By measuring the ear height and the distance from the speaker to the listening position, you will be able to align the system for your listening position.

Figure 10 - Rotation of Upper Module

Alignment Procedure

Each upper modules' rear spike rests on a specific step in the Alignment Block that determines its group delay position within the modular array. To determine the amount of module rotation needed, find the desired ear height and listening distance on the Alignment Table (found in Section 9) and read from it the step required. A number of one thru 15 requires the use of the standard alignment spike (see Figure 13). A number preceded by an "S" (S+1, S+2, etc) requires the use of the longer, 2-inch spike (see Figure 14). Figure 12 shows the location of the numbers on the Alignment Block. By counting from the bottom step starting at one and counting upward, you may

Downloaded from www.linephaze.com
- Find specs, manuals and used listings across thousands of audio products.

determine the location of the rear alignment spike referred to in the Group Delay Table. The Group Delay Table contains the information for the rotation of the module within the array. As mentioned, the alignment height is set by the Alignment Block. Determine the alignment of the upper module as follows:

1. Repeat each step of this procedure on the left and right channels simultaneously.

2. Remove the Group Delay Table from Section 9 in this booklet and place it close by for easy reference.

3. Make sure that you are in your intended listening position.

4. While sitting, have someone measure your ear height from the floor directly below your ear. You should be relaxed in your chair, as you would be when listening to music (see Figure 11).

5. Now measure the distance (on the floor) from the point on the floor below your ear to the base of the loudspeaker, as shown in Figure 11.

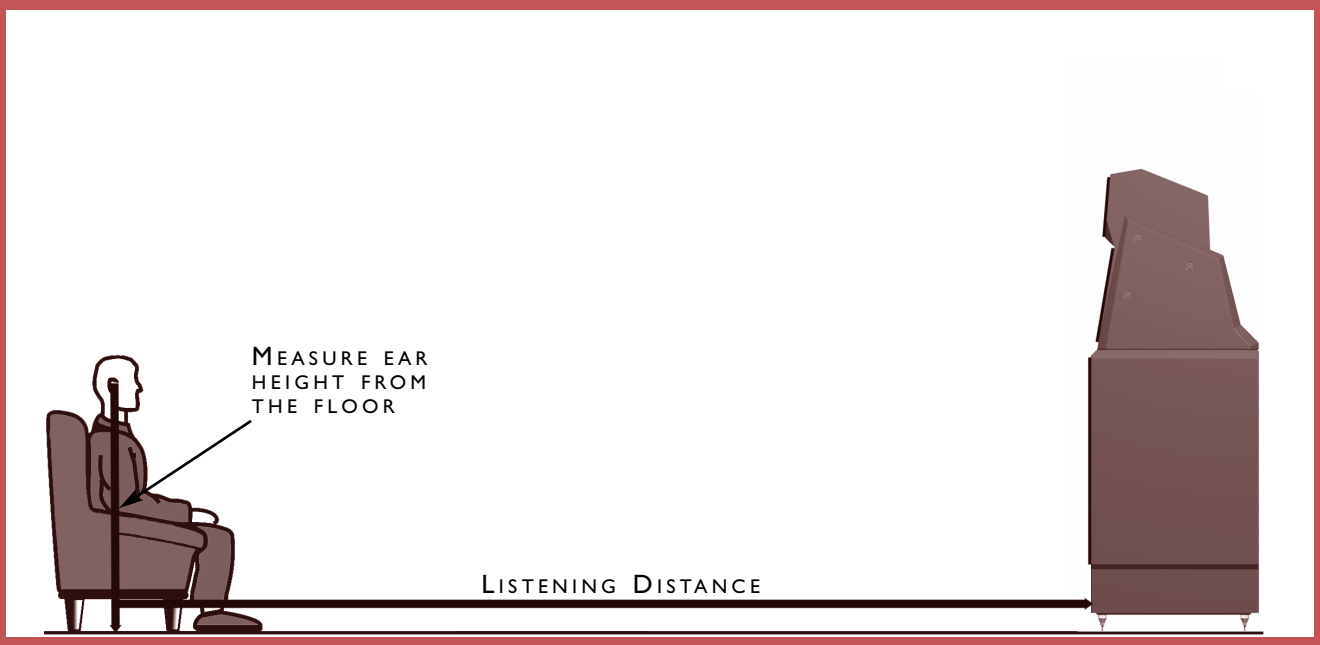

Figure 11 - Listening distance and dar height

Downloaded from www.linephaze.com
- Find specs, manuals and used listings across thousands of audio products.

6. Refer to the Alignment Table (see Section 9) and locate the corresponding ear height. This will indicate the location of the rear alignment spike on the Alignment Block. The standard spike is installed at the factory and requires no installation - do not remove it. Choose the proper spike (standard or 2 inch). If the 2-inch spike is required for your setup, screw it into the threaded hole on the center

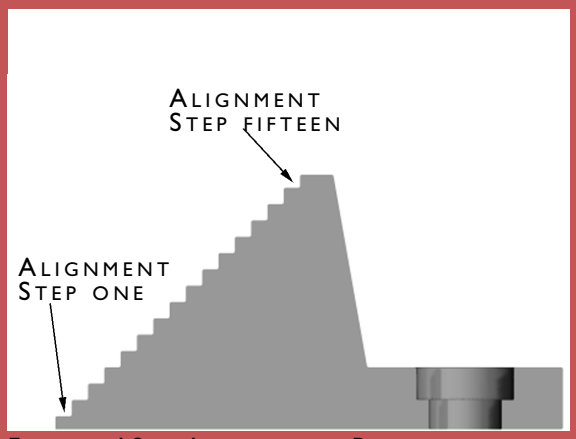

Figure 12 - Alignment Block step configuration

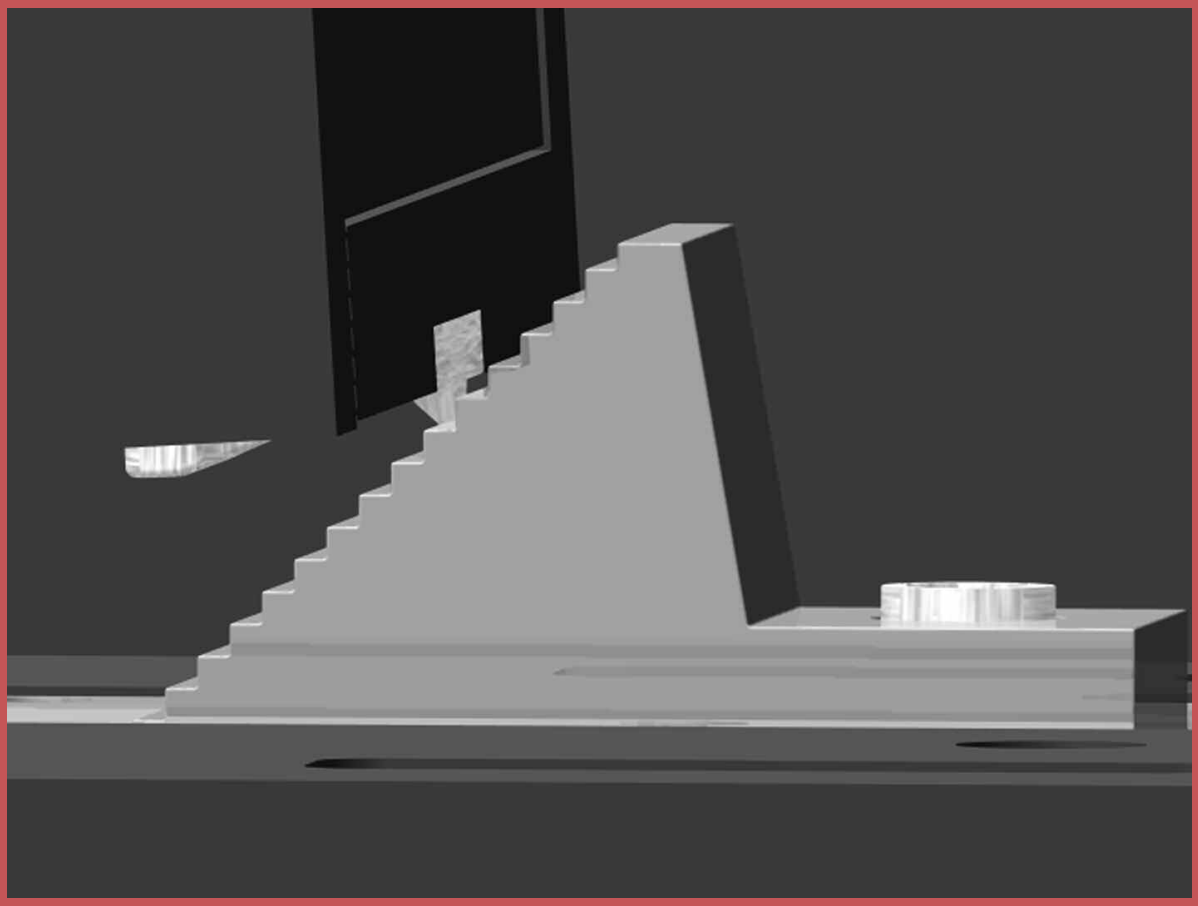
Figure 13 - Alignment assembly with standard spike

Downloaded from www.linephaze.com
- Find specs, manuals and used listings across thousands of audio products.

of the standard spike until it is flush with the base of the standard spike.

7. Place the spike on the step indicated from the table in Section 9 (See Figures 12, 13, and 14).

Note: The short spikes (labeled A) are always used at the front of the upper module.

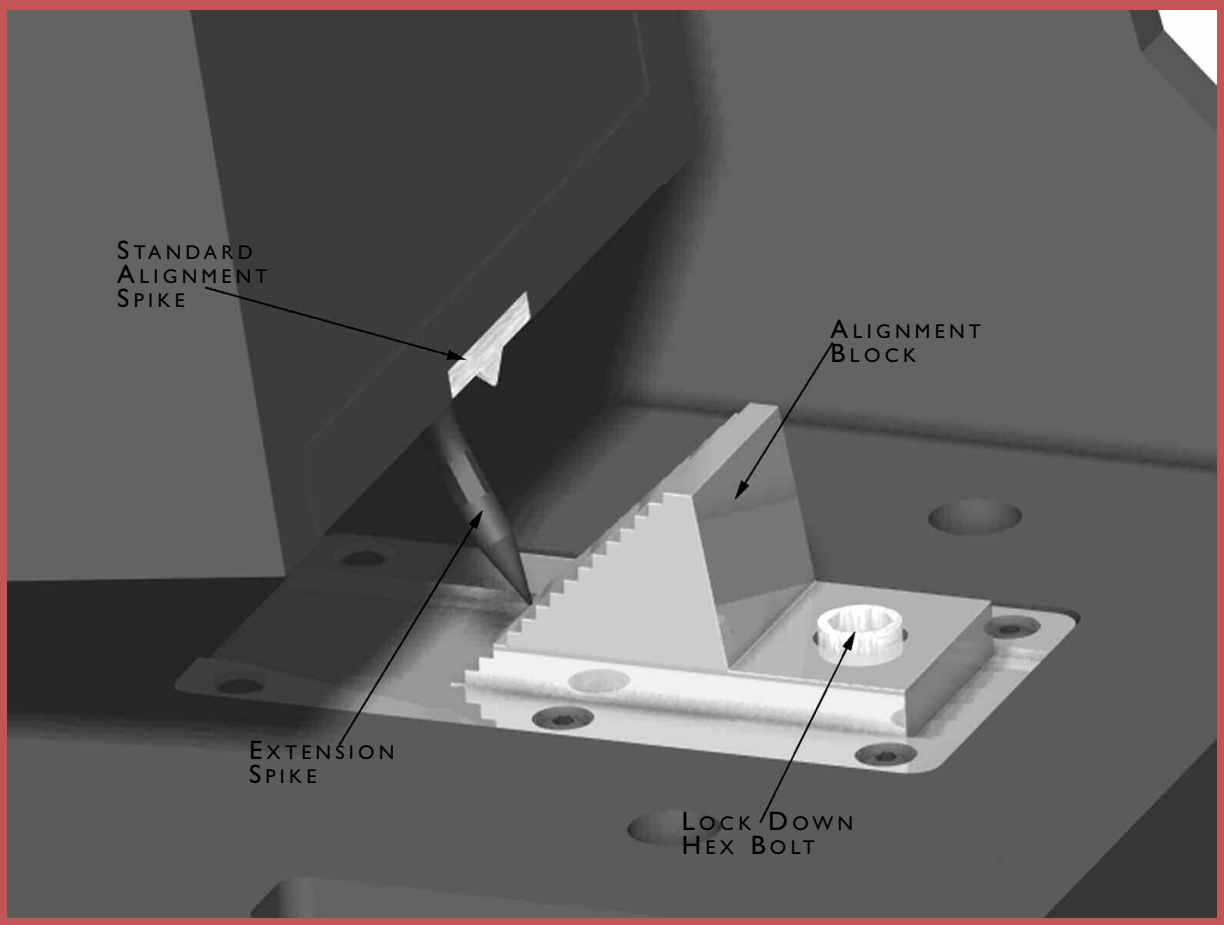

Figure 14 - Alignment assembly with two inch Spike

Downloaded from www.linephaze.com
- Find specs, manuals and used listings across thousands of audio products.

Downloaded from www.linephaze.com
- Find specs, manuals and used listings across thousands of audio products.

Section 5 – Finishing Up

Downloaded from www.linephaze.com
- Find specs, manuals and used listings across thousands of audio products.

Downloaded from www.linephaze.com
- Find specs, manuals and used listings across thousands of audio products.

Section 5.1 – Anchoring Upper Module to Fascia

The Upper Module is anchored to the Woofer cabinet using 1” nylon-tipped setscrews installed in MAXX fascia before shipment. To secure the Upper Module within the fascia :

1. Visually position the upper module so it is evenly spaced between the left and right fascia (See Figure 15).

2. Lightly tighten down each of the nylon-tipped setscrews.

3. Check that the spacing from each fascia has maintained equal distance and adjust if needed.

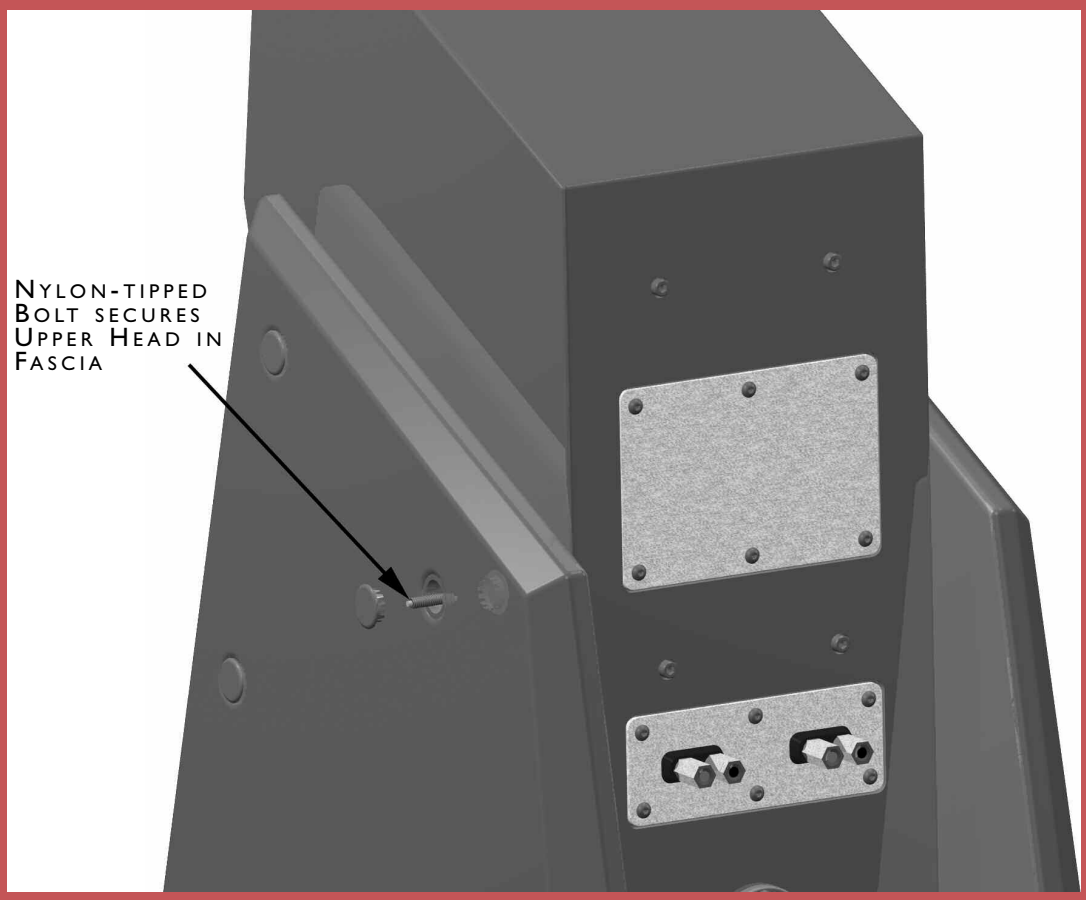

Figure 15 - Securing the Upper Module

Downloaded from www.linephaze.com
- Find specs, manuals and used listings across thousands of audio products.

4. Re-tighten each of the nylon-tipped setscrews; the screw should be snug but not over tightened. Light tightening by hand is all that is needed. Electric screw-drivers should not be used.

Section 5.2 – Wiring Attachments

Only two connections need to be made to wire MAXX: connecting the wires from the amplifier and connecting the twisted wire found at the top of the woofer cabinet to the Upper Module. Use the following process:

- Looking from the back, connect the left wire exiting the woofer cabinet to the left terminal pair connection labeled Mid-Frequency. The red wire connects to

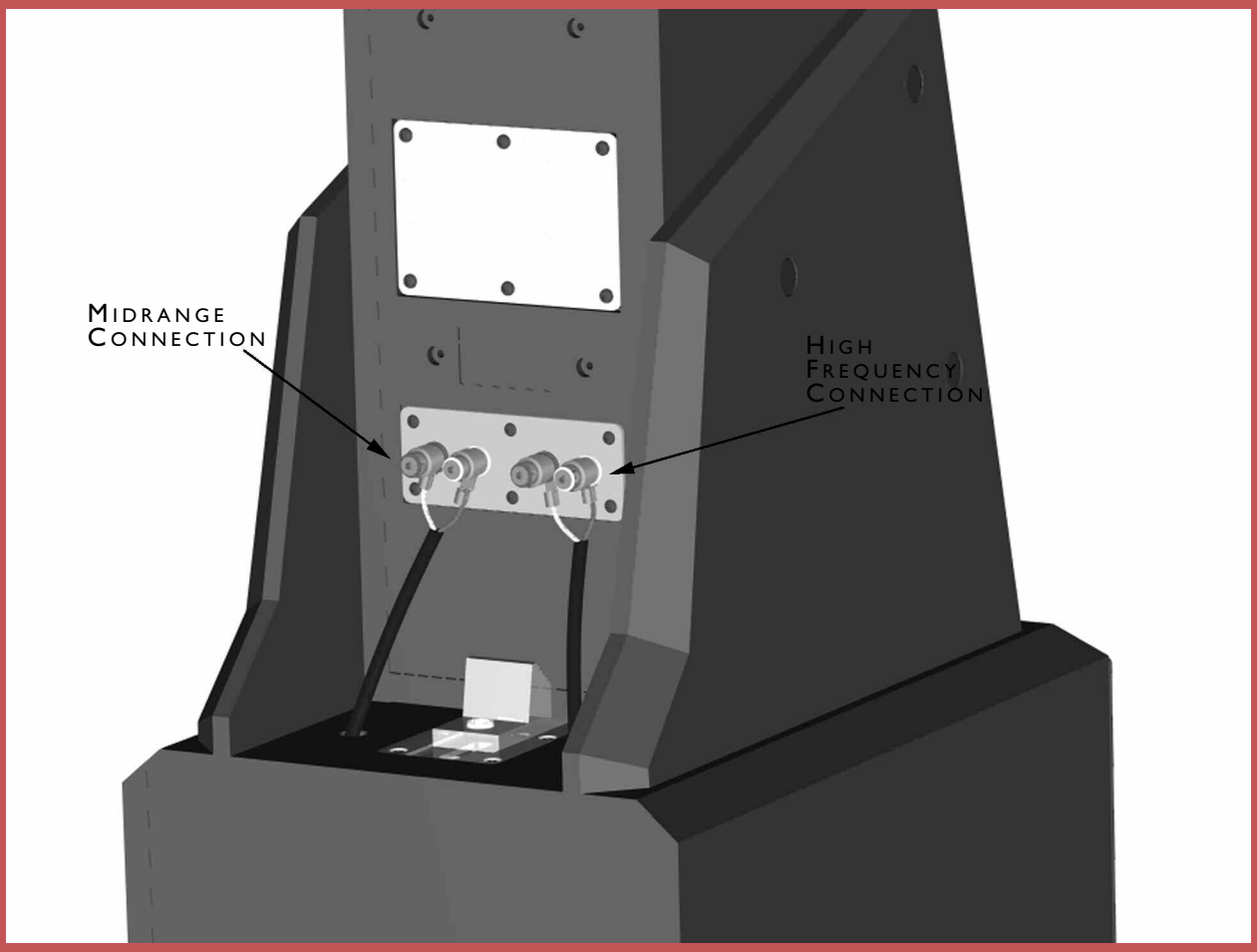

Figure 16 - Attaching upper wires

Downloaded from www.linephaze.com
- Find specs, manuals and used listings across thousands of audio products.

the red terminal and the black wire to the black terminal.

- Connect the wire exiting the right side of the woofer cabinet to the right side terminal pair labeled High-Frequency (see Figure 16).
- Attach the main input from the amplifier to the Main Input terminals located on the bottom module in the rear.

Section 5.3 – Spike Installation

Note: This is a 2-person job. Do not attempt this with only one person. The MAXX weight is over 400-lbs. and may cause injury if tipped over.

Materials Required

- 8 sets of spikes
- Caster wrench
- 9/16" combination wrench

Installation Procedure:

- Have one person tilt the MAXX just enough to remove the caster.
- Use the caster wrench to loosen the casters. Remove the casters and set them aside.
- Insert the finished spike assembly. Hand-tighten only!

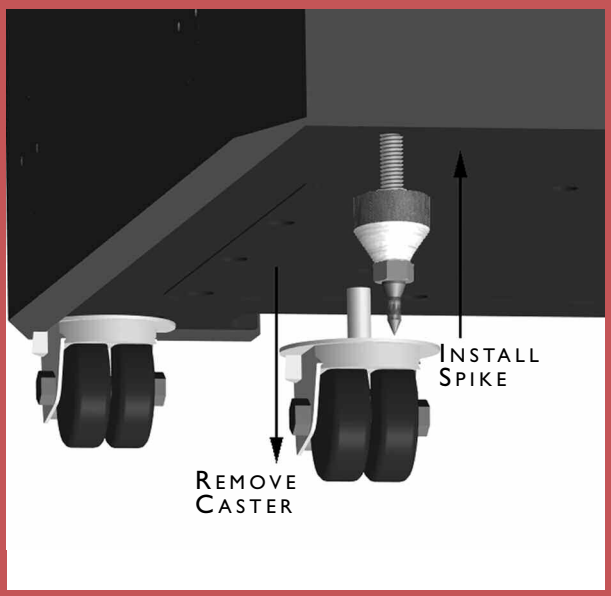

FIGURE 17 - INSTALLING THE SPIKES

Note: Be very careful NOT TO CROSS THREAD the spikes. The base of the MAXX is made of "X" material and is prone to cross threading (see Figure 17).

Downloaded from www.linephaze.com
- Find specs, manuals and used listings across thousands of audio products.

- Repeat the previous process of the caster removal/spike insertion on the opposite side of the enclosure. Then continue the process on the other channels.

Note: The MAXX will be off-balance at this point, and you should be certain that they don't tip all the way over. The MAXX is inherently stable; nonetheless, EXERCISE CAUTION.

Section 5.4 – Leveling the MAXX

- Place a level on the left to right oriented axis in the flat area atop the woofer behind the Upper Module. If it is level, move to the next step.

- If the bubble shows that the speaker is leaning toward the center of the room, you will have to lengthen one of the inside spikes down toward the floor. If the bubble is leaning toward the outside of the room, you will have to lengthen one of the outside spikes down toward the floor.

- You may rotate the spike tips in place by using a vice-grip or toothed pliers.

- To find out which spike to lower, grasp the MAXX channel and rock it back and forth. This will identify the spike that is out of level from the other three.

- Place a level on the front to back oriented axis. If it is level, then your MAXXs are level. If the bubble shows that the speaker is leaning toward the front of the room, you will have to lengthen the front spikes down toward the floor. If the bubble shows that the speaker is leaning toward the back of the room (behind the loudspeakers), you will have to lengthen the rear spikes down toward the floor.

Section 5.5 – Installing the Painted Hole Covers

Wilson has provided painted hole covers that are inserted in the fascia blade. There are three covers for each fascia side. The hole covers are installed as follows:

- One at a time, carefully remove the hole covers from the shipping board.

Downloaded from www.linephaze.com
- Find specs, manuals and used listings across thousands of audio products.

- Gently press the cover into the hole, taking care to not mar the paint on the fascia or the hole cover itself.
- If the cover does not sit flush, remove it from the hole and gently bend the prongs on the rear of the button inward.
- Repeat for the rest of the holes.

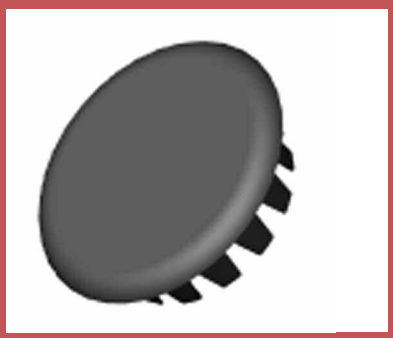

Figure 18 - Fascia hole cover

Note: When removing the hole covers from the fascia, never pry them with a metal screwdriver or other metal tools as this will damage the paint. To gently remove the cover, use a plastic screwdriver, first covering the tip with cloth.

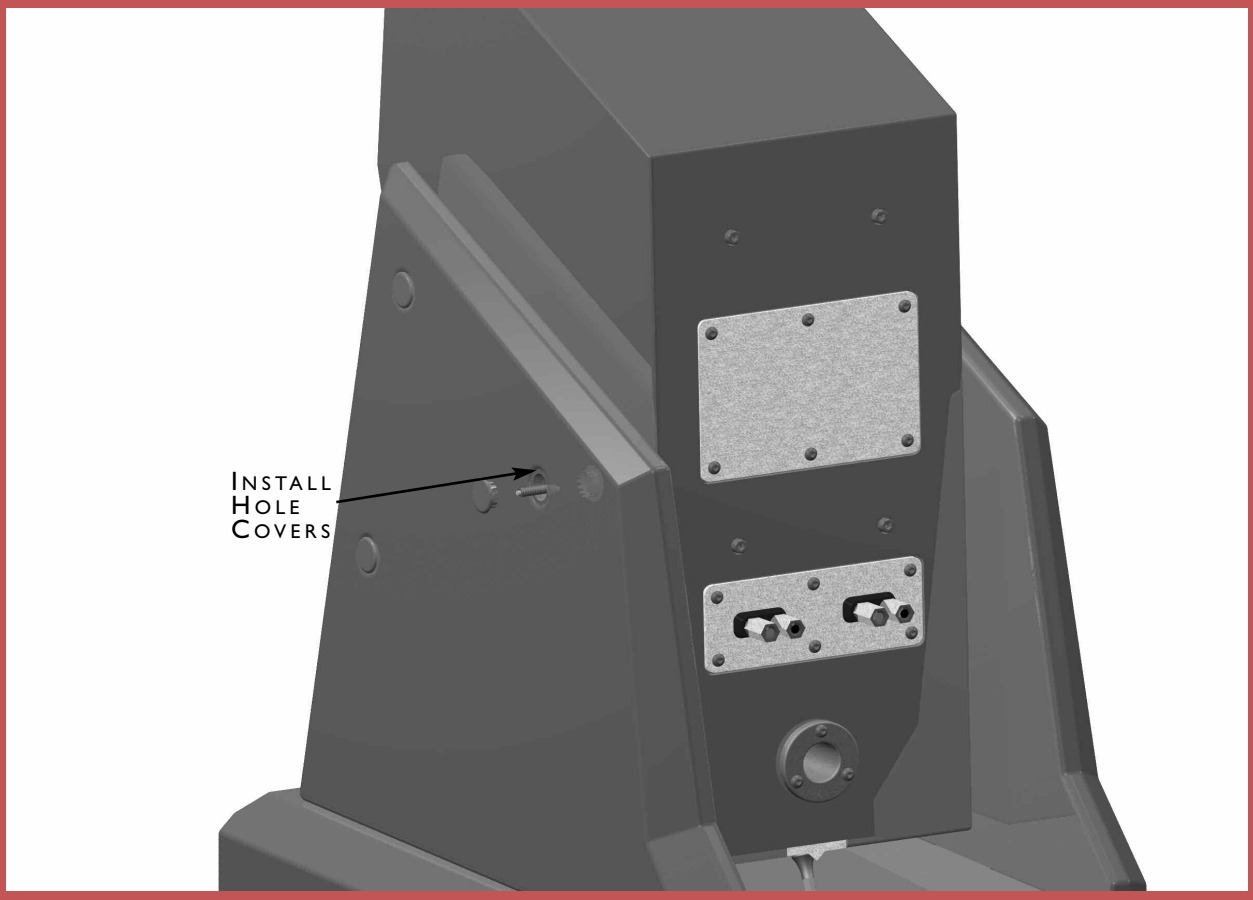

Figure 19 - Fascia holes

Downloaded from www.linephaze.com
- Find specs, manuals and used listings across thousands of audio products.

Downloaded from www.linephaze.com
- Find specs, manuals and used listings across thousands of audio products.

MAXX™ series 2

Section 6 – Care of the MAXX

WILSON®

Downloaded from www.linephaze.com
- Find specs, manuals and used listings across thousands of audio products.

Downloaded from www.linephaze.com
- Find specs, manuals and used listings across thousands of audio products.

Section 6.1 – Painted Finish

Your MAXX loudspeakers are hand painted with WilsonGloss™ paint and hand polished to a high luster. While the finish seems quite dry to the touch, final curing and complete hardening takes place over a period of several weeks. To protect the finish of the MAXX during final manufacture, shipment, and setup in your listening room, we have applied a removable layer of protective film over the finish. We recommend that this film be left in place until the speakers are in their final location in your listening room. Once you have determined their final position, remove the film by peeling it off. Do not leave this film on indefinitely as it may leave impressions on the paint.

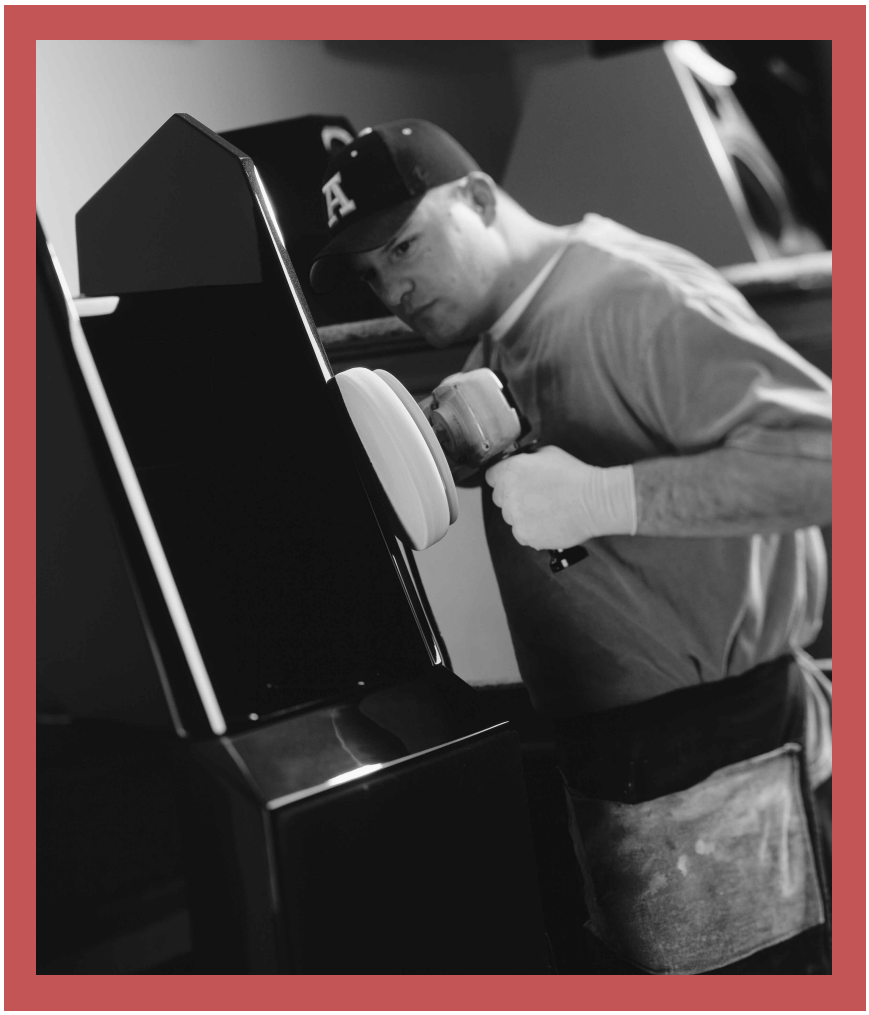

It is important that the delicate paint finish of the MAXX be dusted carefully with the dust cloth, which has been provided. We recommend that the following procedure be observed when dusting the speakers:

- Blow off all loose dust.
- Using the special dust cloth as a brush, gently whisk off any remaining loose dust.

Downloaded from www.linephaze.com
- Find specs, manuals and used listings across thousands of audio products.

- Shake out the dust cloth.
- Dust the finish, using linear motions in one direction parallel to the floor. Avoid using circular or vertical motions.

Because the paint requires a period of several weeks to fully cure, we recommend that no cleaning fluids, such as glass cleaners, be used during this initial period of time. When the paint is fully cured, heavy fingerprints and other minor smudges may be removed with a glass cleaner. Always use the dust cloth. Stronger solvents are not recommended under any circumstances. Consult your dealer for further information if required. To maintain the high luster of the finish, periodic polishing may be desired over the years. We recommend a nonabrasive carnauba-based wax and a soft cloth.

Section 6.2 – Break-in Period

All audio equipment will sound its best after its components have been broken in for some period of use. Wilson Audio breaks in all woofers and mid-range drivers for a 12-hour period. All drivers are then tested, calibrated, and matched for their acoustical properties. In your listening room, expect 25 to 50 percent of break-in to be complete after two hours of playing music fairly loudly. Ninety percent of break-in is complete after 24 hours of playing. Playing a "disc repeat" overnight can accomplish this task quickly. Wilson Audio recommends chamber music for this task.

Section 6.3 – Enclosure Construction

At the core of each Wilson Audio loudspeaker design is the knowledge that to achieve the best performance, you must start with the best materials. Here are a few of the elements that contribute to the MAXX enclosure's supreme performance.

Downloaded from www.linephaze.com
- Find specs, manuals and used listings across thousands of audio products.

Material

The MAXX's low frequency enclosure is constructed from a high-density, phenolic resin based composite. This composite meets and exceeds the highest of ANSI test standards for its use, while offering very tight tolerances, high hardness, uniform density, and dimensional stability. In the construction of the MAXX, Wilson Audio uses two types of composites dubbed "X" material and "M" material. These strategic combinations of X and M materials are used in the two midrange modules, resulting in the most inert enclosures yet produced. X material is used exclusively in the woofer and tweeter modules.

The high hardness of this composite not only offers excellent acoustical properties, but it also provides an ideal surface for painting.

Adhesive

Wilson Audio has conducted exhaustive research into the best adhesives to permanently bond our speaker enclosures. This is an often-overlooked element crucial to the

Downloaded from www.linephaze.com
- Find specs, manuals and used listings across thousands of audio products.

proper performance of a loudspeaker. Correct modulus of elasticity, coefficient of thermal expansion, and natural frequency response are just a few of the important elements of adhesives.

A highly cross-linked, thermo-set adhesive is used for the construction of the enclosure. It was also chosen for its excellent bond strength, solvent resistance, hardness, and optimum vibrational characteristics.

Conclusion

The combination of the best in composite materials and adhesive technology, provided to us by the leaders in their industries, allows us to design an enclosure with unmatched performance. The MAXX's upper and lower cabinet modules have been designed to eliminate vibration and cabinet signature while maintaining an internal acoustical integrity. Wilson's exhaustive research into the effects of materials, enclosure construction strategies, and adhesives has yielded a product that maintains the strictest structural tolerances, durability, and reliability. The MAXX's performance is repeatable and is unaffected by different climatic conditions throughout the world. The MAXX redefines the boundaries of what is possible in enclosure design.

Downloaded from www.linephaze.com
- Find specs, manuals and used listings across thousands of audio products.

Downloaded from www.linephaze.com
- Find specs, manuals and used listings across thousands of audio products.

Downloaded from www.linephaze.com
- Find specs, manuals and used listings across thousands of audio products.

Section 7 – Troubleshooting

Downloaded from www.linephaze.com
- Find specs, manuals and used listings across thousands of audio products.

Downloaded from www.linephaze.com
- Find specs, manuals and used listings across thousands of audio products.

One channel is not operating...

Check the interconnects from source.

Check the connections on the speaker cables, both at the amplifier and speaker ends. Watch especially for connectors touching each other.

Check the Upper Range Signal Cables. You may have forgotten to connect them, or they may have shorted or come loose during setup.

Imaging is off-center...

Check your connections. A connection to one of the modules may have come loose. When a tweeter or midrange driver is not working, or is out of phase, the MAXX will not "image" properly. Double check your connections for red-to-red and black-to-black.

Play music at a low level and listen to each driver in each channel. You may have a driver that is not operating correctly. If you find a driver that is silent, please go to the "Driver Out" section of this troubleshooting guide.

A chronic lack of bass energy...

Check the input cable connections on your woofer enclosure. If one channel is out of phase (connections reversed), bass will be cancelled. **Note: Turn off your amplifier, and unplug it from the wall.**

Driver out or not playing after connections have been verified.

If you have found a driver with no output, move to the rear of this particular loudspeaker.

Using the appropriate Allen key, open the lower aluminum door on the back of the upper

Downloaded from www.linephaze.com
- Find specs, manuals and used listings across thousands of audio products.

crossover cover. You will find some resistor connections. These are labeled "Front Tweeter Level", "Midrange Level", "Midrange Phase", and "Woofer Damping." Replace the resistor with the supplied matching resistor. Tighten the new resistor in the old one's place.

Note: Use only Wilson Audio replacement resistors in your MAXX. These resistors were carefully chosen for the overall sonic and thermal performance.

Plug your amplifier into the wall and turn it on.

Listen to the channel at a low level. The driver should now be operating correctly.

Amplifier shuts off as soon as it is turned on:

Check to see if your speaker cables are properly secured. Look for frayed ends, loose connections, or a conductor contacting the amplifier chassis.

Turn the amplifier off and disconnect it from the AC wall outlet. Disconnect the preamplifier leads to the amplifier. Now turn on the amplifier.

If the problem is solved:

There is likely something wrong with your preamplifier or interconnect. Contact your dealer.

If the problem persists:

Leave the preamp leads disconnected and continue to the next step.

Downloaded from www.linephaze.com
- Find specs, manuals and used listings across thousands of audio products.

Turn the amplifier off and disconnect it from the AC wall outlet. Disconnect the speaker leads at the main input to the speaker. Now turn on the amplifier.

If the problem is solved: Call your Wilson Audio dealer. There may be a problem with the crossover or the speaker's internal wiring.

If the problem persists: Continue to the next step.

Turn the amplifier off and disconnect it from the AC wall outlet. Disconnect the speaker cable leads to the amplifier and turn the amplifier on again.

If the problem is solved: You have a short in your speaker cables. Check for frayed ends, holes (from spike feet), or make sure that your spade lug is not touching the chassis while it is connected to the binding post.

If the problem persists: Call the dealer where you bought your amplifier. You appear to have a problem with this component.

Downloaded from www.linephaze.com
- Find specs, manuals and used listings across thousands of audio products.

Downloaded from www.linephaze.com
- Find specs, manuals and used listings across thousands of audio products.

Section 8 – Specifications

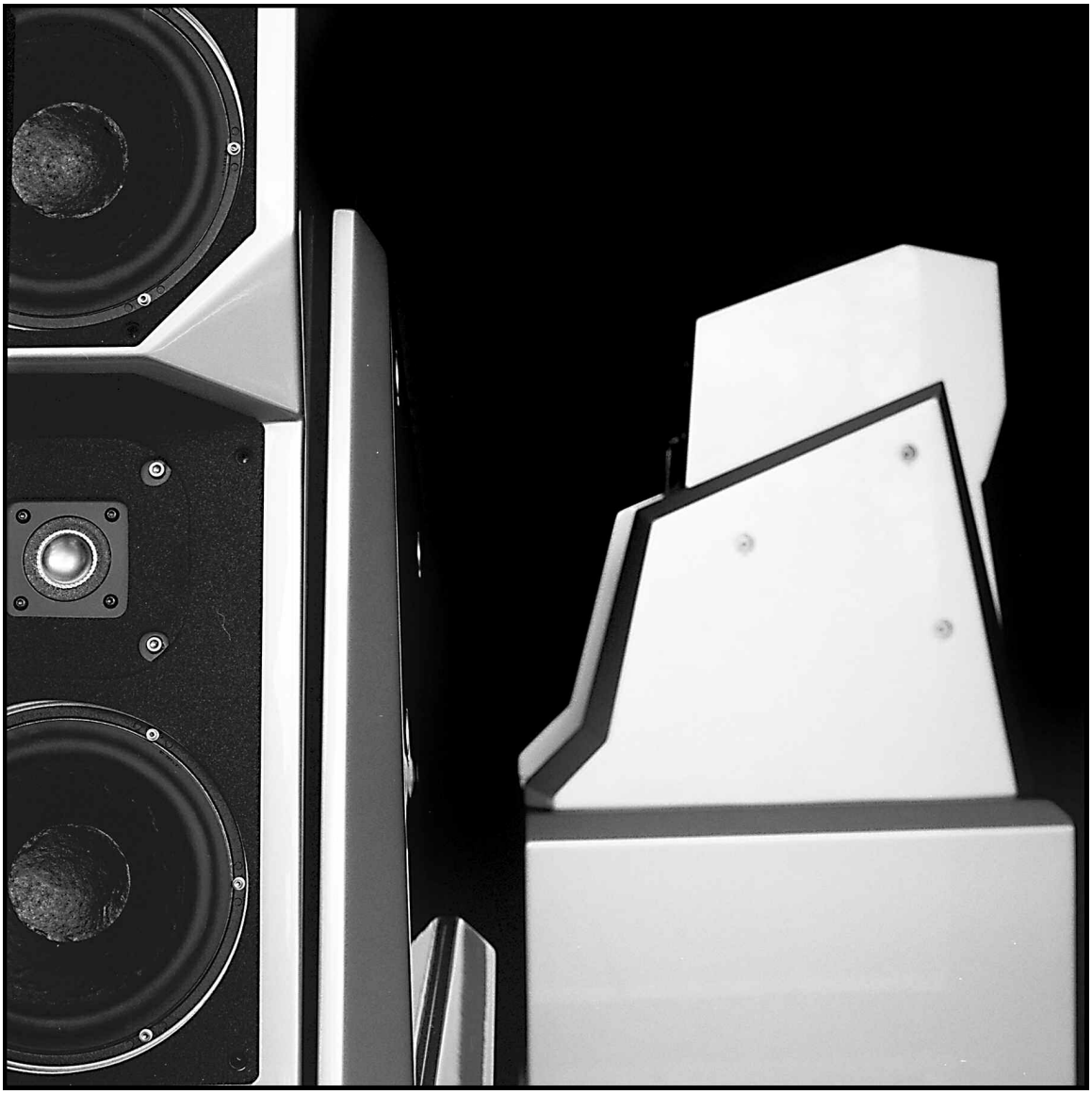

Downloaded from www.linephaze.com
- Find specs, manuals and used listings across thousands of audio products.

Downloaded from www.linephaze.com
- Find specs, manuals and used listings across thousands of audio products.

Enclosure Type:	**Rear Ported Woofer**
	Ported Midrange
	Enclosed Tweeter
Woofers:	**1 - 13 inch**
	1 - 11 inch
Tweeter:	**1 - 1 inch Inverted Titanium Dome**
Midrange:	**2 - 7 inch**
Sensitivity:	**92 dB@ 1 watt (2.83V at meter)**
Nominal Impedance:	**4 ohms 3 ohms minimal**
Minimum Amplifier Power:	**7 Watts per channel**
Frequency Response	**+0, -3dB 20 Hz - 21 kHz (-3dB)**
Overall Dimensions	**Height: 63 inches**
	Width: 17 inches
	Depth: 22 inches
System Weight Per Channel:	**410 lbs each**
System Shipping Weight (approx.):	**1,100 lbs**

Downloaded from www.linephaze.com
- Find specs, manuals and used listings across thousands of audio products.

Downloaded from www.linephaze.com
- Find specs, manuals and used listings across thousands of audio products.

Section 9 – Alignment Table

Downloaded from www.linephaze.com
- Find specs, manuals and used listings across thousands of audio products.

Downloaded from www.linephaze.com
- Find specs, manuals and used listings across thousands of audio products.

Listening Distance	Measured Ear Height (distance from floor to center of ear)															
	36”	38”	40”	42”	44”	46”	48”		36”	38”	40”	42”	44”	46”	48”
8' 0"	S+12	S+10	S+7	S+4	S+2	14	11	16' 4"	S+2	S+1	15	14	12	11	10
8' 4"	S+11	S+9	S+6	S+4	S+1	14	11	16' 8"	S+2	S+1	15	13	12	11	10
8' 8"	S+11	S+8	S+6	S+3	15	13	11	17' 0"	S+2	S+1	14	13	12	11	10
9' 0"	S+10	S+8	S+5	S+3	15	13	11	17' 4"	S+2	S+1	14	13	12	11	10
9' 4"	S+9	S+7	S+5	S+3	15	13	11	17' 8"	S+2	S+1	14	13	12	11	10
9' 8"	S+9	S+7	S+5	S+2	15	13	11	18' 0"	S+2	15	14	13	12	11	10
10’ 0"	S+8	S+6	S+4	S+2	15	13	11	18' 4"	S+1	15	14	13	12	11	10
10’ 4"	S+8	S+6	S+4	S+2	15	13	11	18' 8"	S+1	15	14	13	12	11	10
11’ 8”	S+7	S+5	S+3	S+2	15	13	11	19' 0"	S+1	15	14	13	12	11	9
11' 0"	S+7	S+5	S+3	S+1	14	12	11	19" 4"	S+1	15	14	13	12	11	9
11' 4"	S+7	S+5	S+3	S+1	14	12	10	19' 8"	S+1	15	14	13	12	11	9
11’ 8"	S+6	S+4	S+3	S+1	14	12	10	20' 0"	S+1	15	14	13	12	10	9
12' 0"	S+6	S+4	S+2	S+1	14	12	10	20' 4"	S+1	15	14	13	11	10	9
12' 4"	S+5	S+4	S+2	15	14	12	10	20' 8"	S+1	14	13	12	11	10	9
12' 8"	S+5	S+4	S+2	15	14	12	10	21' 0"	15	14	13	12	11	10	9
13' 0"	S+5	S+3	S+2	15	13	12	10	21' 4"	15	14	13	12	11	10	9
13' 4"	S+5	S+3	S+1	15	13	12	10	21' 8"	15	14	13	12	11	10	9
13' 8"	S+4	S+3	S+1	15	13	12	10	22' 0"	15	14	13	12	11	10	9
14' 0"	S+4	S+3	S+1	15	13	12	10	22' 4"	15	14	13	12	11	10	9
14’ 4"	S+4	S+2	S+1	14	13	11	10	22' 8"	15	14	13	12	11	10	9
14' 8"	S+4	S+2	S+1	14	13	11	10	23' 0"	15	14	13	12	11	10	9
15' 0"	S+3	S+2	15	14	13	11	10	23' 4"	15	14	13	12	11	10	9
15' 4"	S+3	S+2	15	14	13	11	10	23' 8"	15	14	13	12	11	10	9
15' 8"	S+3	S+2	15	14	12	11	10	24' 0"	15	14	13	12	11	10	9
16' 0"	S+3	S+1	15	14	12	11	10								

Downloaded from www.linephaze.com
- Find specs, manuals and used listings across thousands of audio products.

Downloaded from www.linephaze.com
- Find specs, manuals and used listings across thousands of audio products.

MAXX™ series 2

Section 10 – Warranty Information

WILSON®

Downloaded from www.linephaze.com
- Find specs, manuals and used listings across thousands of audio products.

Downloaded from www.linephaze.com
- Find specs, manuals and used listings across thousands of audio products.

Limited Warranty

Subject to the conditions set forth herein, Wilson Audio warrants its loudspeakers to be free of manufacturing defects in material and workmanship for the Warranty Period. The Warranty Period is a period of 90 days from the date of purchase by the original purchaser, or if both of the following two requirements are met, the Warranty Period is a period of five (5) years from the date of purchase by the original purchaser:

> **Requirement No. 1.** No later than 30 days after product delivery to the customer, the customer must have returned the Warranty Registration Form to Wilson Audio;
>
> **Requirement No. 2.** The product must have been professionally installed by the Wilson Audio dealer that sold the product to the customer.

FAILURE TO COMPLY WITH EITHER REQUIREMENT NO. 1 OR REQUIREMENT NO. 2 WILL RESULT IN THE WARRANTY PERIOD BEING LIMITED TO A PERIOD OF 90 DAYS ONLY.

Conditions

This Limited Warranty is also subject to the following conditions and limitations. The Limited Warranty is void and inapplicable if the product has been used or handled other than in accordance with the instructions in the owner's manual, or has been abused or misused, damaged by accident or neglect or in being transported, or if the product has been tampered with or service or repair of the product has been attempted or performed by anyone other than Wilson Audio, an authorized Wilson Audio Dealer Technician or a service or repair center authorized by Wilson Audio to service or repair the product. Contact Wilson Audio at (801) 377-2233 for information on location of Wilson Audio Dealers and authorized service and repair centers. Most repairs can be made in the field. In instances where return to Wilson Audio's factory is required, the dealer or customer must first obtain a

Downloaded from www.linephaze.com
- Find specs, manuals and used listings across thousands of audio products.

return authorization. Purchaser must pay for shipping to Wilson Audio, and Wilson Audio will pay for shipping of its choice to return the product to purchaser. A RETURNED PRODUCT MUST BE ACCOMPANIED BY A WRITTEN DESCRIPTION OF THE DEFECT. Wilson Audio reserves the right to modify the design of any product without obligation to purchasers of previously manufactured products and to change the prices or specifications of any product without notice or obligation to any person.

Remedy

In the event that the product fails to meet the above Limited Warranty and the conditions set forth herein have been met, the purchaser's sole remedy under this Limited Warranty shall be to: (1) contact an authorized Wilson Audio Dealer within the Warranty Period for service or repair of the product without charge for parts or labor, which service or repair, at the Dealer's option, shall take place either at the location where the product is installed or at the Dealer's place of business; or (2) if purchaser has timely sought service or repair and the product cannot be serviced or repaired by the Dealer, then purchaser may obtain a return authorization from Wilson Audio and at purchaser's expense return the product to Wilson Audio where the defect will be rectified without charge for parts or labor.

Warranty Limited to Original Purchaser

This Limited Warranty is for the sole benefit of the original purchaser of the covered product and shall not be transferred to a subsequent purchaser of the product, unless the product is purchased by the subsequent purchaser from an authorized Wilson Audio Dealer who has certified the product in accordance with Wilson Audio standards and requirements and the certification has been accepted by Wilson Audio, in which event the Limited Warranty for the product so purchased and certified shall expire at the end of the original Warranty Period applicable to the product.

Downloaded from www.linephaze.com
- Find specs, manuals and used listings across thousands of audio products.

Demonstration Equipment

Equipment, while used by an authorized dealer for demonstration purposes, is warranted to be free of manufacturing defects in materials and workmanship for a period of five (5) years from the date of shipment to the dealer. Demo equipment needing warranty service may be repaired on-site or, if necessary, correctly packed and returned to Wilson Audio by the dealer at dealer's sole expense. Wilson Audio will pay return freight of its choice. A returned product must be accompanied by a written description of the defect. Dealer owned demonstration equipment sold at retail within two (2) years of date of shipment to the dealer is warranted to the first retail customer to be free of manufacturing defects in materials and workmanship for the same time periods as if the product had originally been bought for immediate resale to the retail customer. Wilson Audio products are warranted for a period of 90 days, unless extended to 5 years, as provided above, by return and filing of completed Warranty Registration at Wilson Audio within 30 days after product delivery to customer and the product was professionally installed by the Wilson Audio Dealer that sold the product to the customer.

Miscellaneous

ALL EXPRESS AND IMPLIED WARRANTIES NOT PROVIDED FOR HEREIN ARE HEREBY EXPRESSLY DISCLAIMED. ANY LEGALLY IMPOSED IMPLIED WARRANTIES RELATING

Downloaded from www.linephaze.com
- Find specs, manuals and used listings across thousands of audio products.

Downloaded from www.linephaze.com
- Find specs, manuals and used listings across thousands of audio products.

MAXX™
series 2

WILSON®

Downloaded from www.linephaze.com
- Find specs, manuals and used listings across thousands of audio products.