PIONEER®
The future of sound and vision.

Service Manual

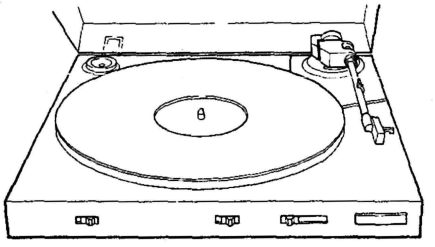

ORDER NO.
ARP1478

STEREO TURNTABLE

PL-Z91 ZEBM

PL-Z81 ZEBM

- This service manual is applicable to the PL-Z91/ZEBM and PL-Z81/ZEBM types.

CONTENTS

1. SPECIFICATIONS 2
2. PANEL FACILITIES 2
3. PACKING 3
4. DISASSEMBLY 4
5. EXPLODED VIEWS 6
6. SCHEMATIC DIAGRAM 12
7. P.C. BOARDS CONNECTION DIAGRAM 13
8. ELECTRICAL PARTS LIST 14
9. PRECAUTIONS FOR REASSEMBLY 15
10. ADJUSTMENTS 19
RÉGLAGE 21
AJUSTE 23

PIONEER ELECTRONIC CORPORATION 4-1, Meguro 1-Chome, Meguro-ku, Tokyo 153, Japan
PIONEER ELECTRONICS SERVICE INC. P.O. Box 1760, Long Beach, California 90801 U.S.A.

Downloaded from www.linephaze.com
- Find specs, manuals and used listings across thousands of audio products.

1. SPECIFICATION

Turntable: PL-Z91/PL-Z81

Motor, Platter

Motor Type ····· DC servo motor
Drive Method ····· belt drive
Speed ····· 33-1/3, 45 RPM
Speed Variation ····· 0.07% WRMS (JIS ±0.10% WTD) Peak (DIN)
S/N Ratio ····· 68 dB (DIN-B)
Platter ····· 295mm dia., aluminum die-cast

Tonearm

Type ····· Dynamic-balance type, straight tonearm

Installed Cartridge

Type ····· MM type
Replacement Stylus ····· PN-210
Stylus ····· 0.6 mil diamond
Output voltage 2.5mV (1kHz, 3.54cm/s, Lat. peak)
Tracking Force ····· 2-3.0g (optimum 2.5g)
Frequency Response ····· 20Hz to 20,000Hz
Load Resistance ····· 47kΩ
Cartridge Weight ····· 4g

Other

Dimensions ····· 360W × 90H × 350.5D(mm)
Weight
PL-Z91 ····· 2.7kg
PL-Z81 ····· 2.7kg

Accessories

EP Adaptor ····· 1

Specifications and design subject to possible modifications without notice due to improvement.

2. PANEL FACILITIES

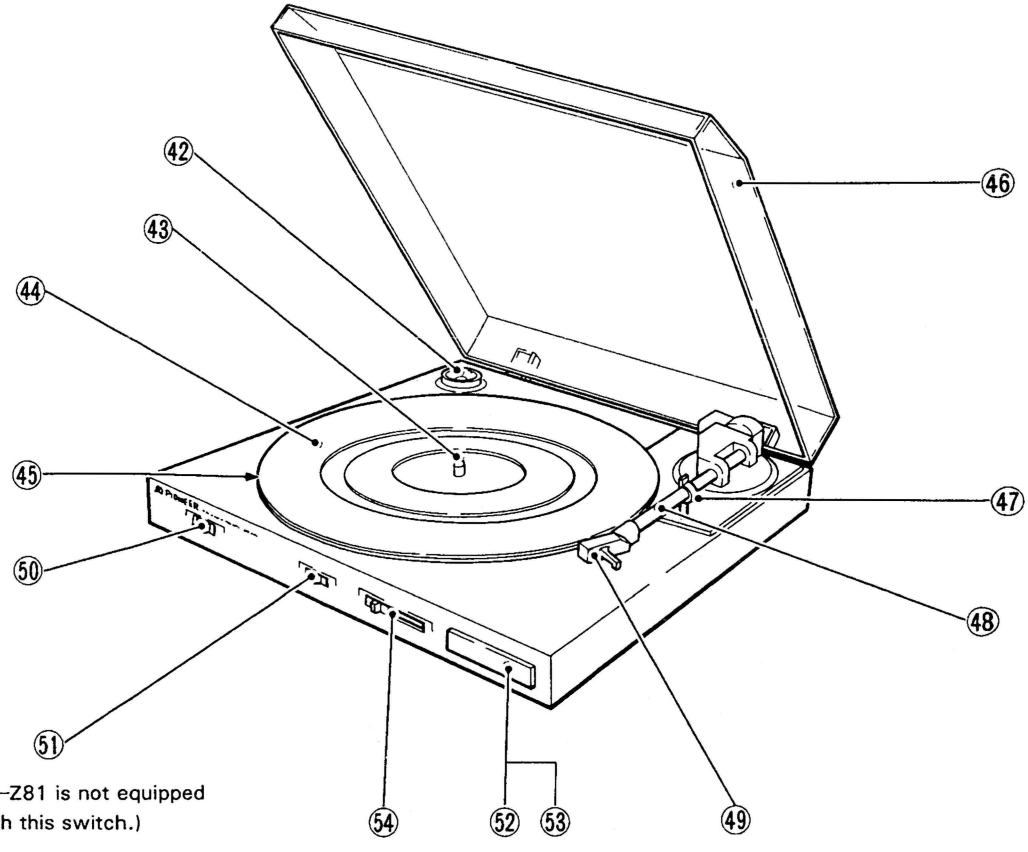

(PL-Z81 is not equipped with this switch.)

Downloaded from www.linephaze.com
- Find specs, manuals and used listings across thousands of audio products.

㊷ EP adaptor

㊸ Platter shaft

㊹ Platter mat

㊺ Platter

㊻ Dust cover

㊼ Arm rest

㊽ Tonearm

㊾ Cartridge

㊿ SPEED switch

Set this switch in accordance with the speed of the record.
33: For 33-1/3 rpm records. 45: For 45 rpm records.

(51) DISC SIZE switch (only PL-Z91)

Set this switch in accordance with the size of the record.
30: For 30 cm LP records. 17: For 17 cm EP records.

(52) PLAY/STOP switch (only PL-Z91)

Press this switch when starting auto play or when stopping play.

NOTE:
Be sure to press the switch firmly when starting playback; if not pressed firmly, the platter may rotate without the tonearm moving.

(53) CUT switch (only PL-Z81)

Press this switch when stopping play.

(54) ARM ELEVATION switch

- Use the switch for manual play.
- Use the switch to suspend record play temporarily.
- Use the switch when changing the tracks during actual play.
  [UP]: The tonearm rises (the stylus moves away from the record).
  [DOWN]: The tonearm descends (the stylus is lowered onto the record).

3. PACKING

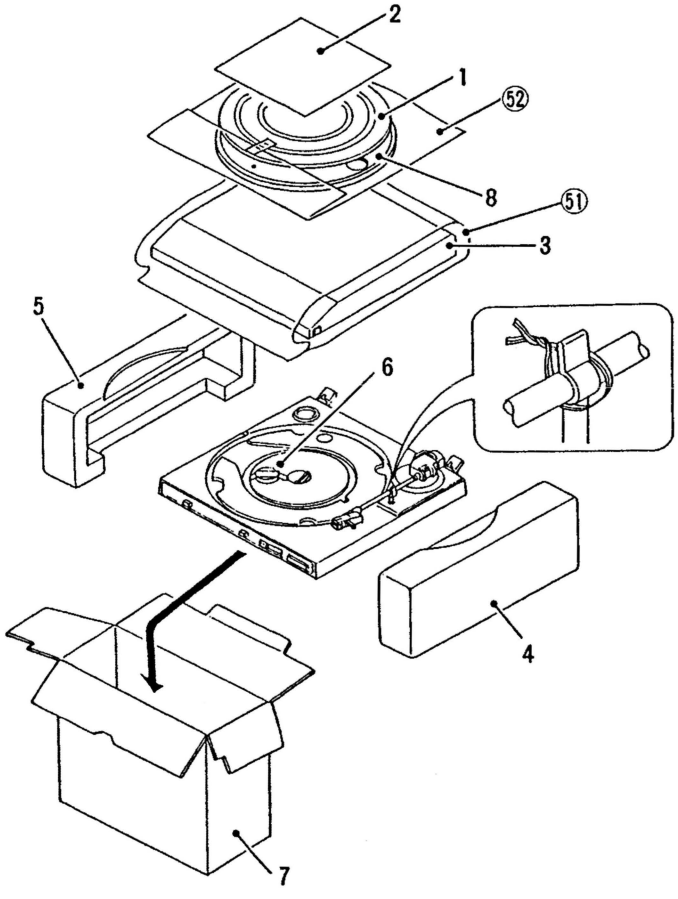

Parts List of Packing (PL-Z91 and PL-Z81)

Mark	No.	Part No.	Description
	1.	PEB1059	Turntable sheet
	2.	PRH1007	Operating instructions
	3.	PNV1008	Dust cover
	4.	PHA1045	Protector (R)
	5.	PHA1046	Protector (L)
	6.	PEC1002	45 adaptor
	7.	PHG1163	Packing case (For PL-Z91)
		PHG1158	Packing case (For PL-Z81)
	8.	PNR1020	Turntable
	51.		Mirror mat
	52.		Vinyl bag

Downloaded from www.linephaze.com
- Find specs, manuals and used listings across thousands of audio products.

4. DISASSEMBLY

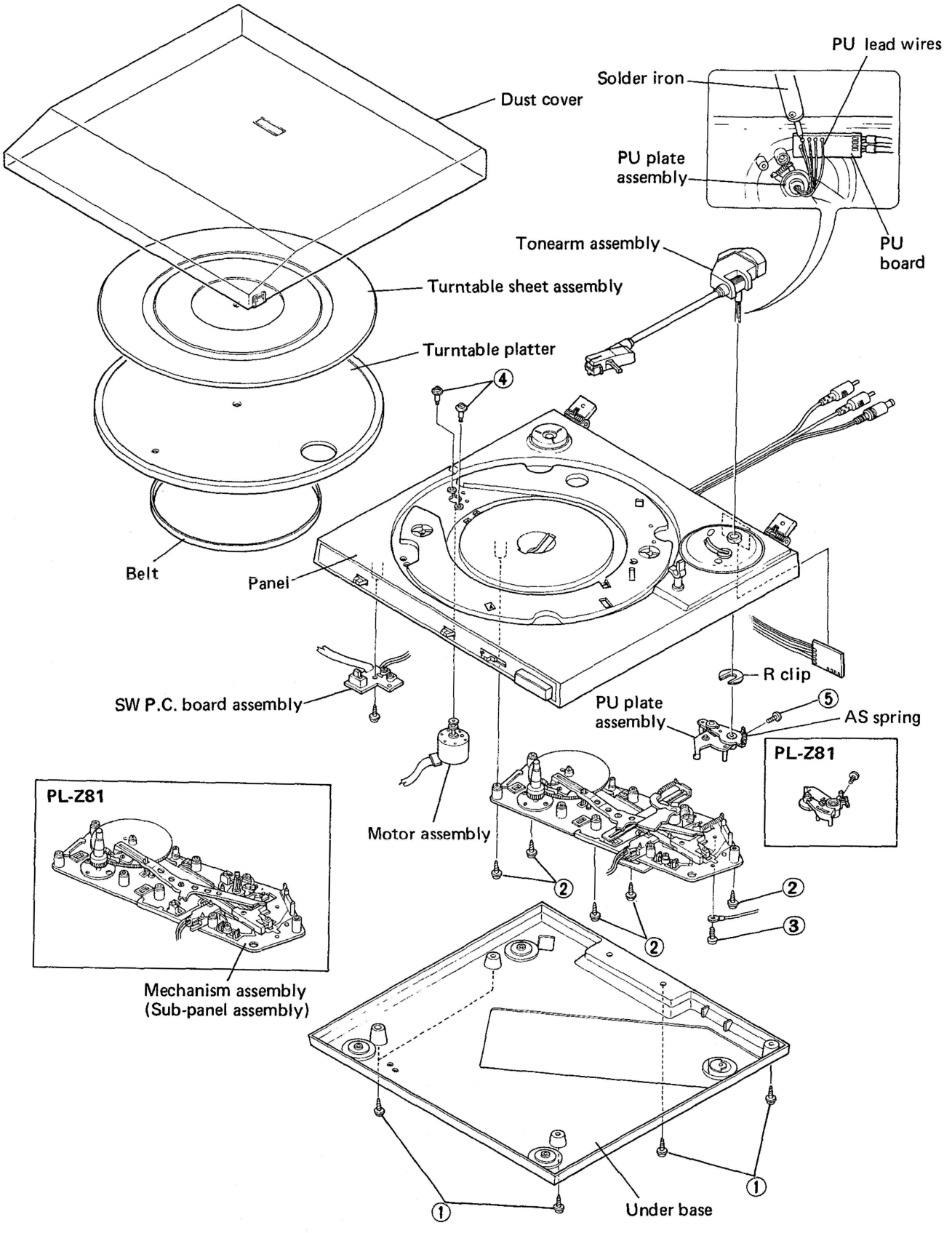

Downloaded from www.linephaze.com
- Find specs, manuals and used listings across thousands of audio products.

- **Mechanism Assembly (Sub-panel Assembly) and Motor**

1. Rotate the turntable platter to disengage the mechanism.
2. Fix the tonearm to the arm rest. (Be sure to cover the stylus with the stylus cover.)
3. Remove the turntable sheet assembly and then the turntable platter.
4. Close the dust cover, turn the turntable upside down, and place it on a soft surface, e.g., a work bench covered with soft cloth (for product protection).
5. Remove the five screws labeled ①, and remove the under base.
6. Remove the five screws labeled ② and one screw labeled ③, and remove the lead connected to the microswitch. This operation will release the mechanism assembly.
7. Remove the two screws labeled ④ to remove the motor assembly.

- **Tonearm assembly**

1. Remove the mechanism assembly from the panel.
2. Unsolder and disconnect the PU leads (arm leads) from the PU printed circuit board.
3. Remove the AS spring from the PU plate assembly.
4. Remove the screw labeled ⑤, and remove the PU plate assembly from the tonearm assembly.
5. Remove the R clip.
6. Place the turntable on one of its sides, remove the arm clamp, and gently pull out the tonearm assembly from the panel.

Downloaded from www.linephaze.com
- Find specs, manuals and used listings across thousands of audio products.

5. EXPLODED VIEW

5.1 EXTERIOR

NOTES:

- *Parts without part number cannot be supplied.*
- *The ⚠ mark found on some component parts indicates the importance of the safety factor of the part. Therefore, when replacing, be sure to use parts of identical designation.*
- *For your Parts Stock Control, the fast moving items are indicated with the marks ★★ and ★.*
  ★★ GENERALLY MOVES FASTER THAN ★
  This classification shall be adjusted by each distributor because it depends on model number, temperature, humidity, etc.
- *Parts marked by "⊙" are not always kept in stock. Their delivery time may be longer than usual or they may be unavailable.*

Parts List of Exterior

Mark	No.	Part No.	Description
	1.	PXA1106	PU cord assembly
	2.	CKDYF103Z50	Ceramic capasistor
★	3.	PPD1016	Arm assembly
	4.	PEB1059	Turntable sheet
★★	5.	PEB1060	Belt
	6.	PNR1020	Turntable
	7.	PBA-112	Screw
	8.	PEB1063	Rubber
	9.	PBK1033	R clip
★	10.	PNW1289	Arm rest
	11.	PBF-020	Washer
	12.	PBH1044	AS spring
	13.	PBH1046	EV spring
	14.	PNW1290	EV sheet
	15.	IPC30P100FMC	Screw
	16.	PBH1050	EV lever spring
	17.	PBH1051	Elevation cam spring
	18.	PED-051	Washer
	19.	PNW1309	Elevation cam
	20.	PXT1017	EV plate spring (D) unit
	21.	WT31D054D050	Washer
	22.	PXA1109	PU plate assembly (PL-Z91 only)
	23.	PXA1114	PU plate (B) assembly (PL-Z81 only)
	24.	PMD40P080FMC	Screw (PL-Z81 only)
	25.	WC40FMC	Washer
	26.	YS40FBT	Washer
	27.	IPC30P100FMC	Screw
	28.	IPC30P290FMC	Screw
	29.	PBK1038	Button stopper F (PL-Z91 only)
	30.	PBK1037	Button stopper R (PL-Z81 only)
	31.	PSZ30P060FMC	Screw
	32.	PNV1008	Dust cover
	33.	PXA1108	Hinge assembly
	34.	....	...
	35.	PEB1061	Insulator
	36.	YP40FBK	Nut
	37.	BPZ26P120FZK	Screw
	38.	PAM1156	Front name plate (For PL-Z91)
		PAM1155	Front name plate (For PL-Z81)
	39.	PNW1294	Panel (For PL-Z91)
		PNW1292	Panel (For PL-Z81)
	40.	PAC1226	Speed button
	41.	PAC1227	EV button
	42.	PAC1228	S/S button
	43.	PEC1002	45 adaptor
	44.	PYY1047	Motor assembly
	45.	PNW1319	Stylus cover
	46.	PXV1004	Cartridge
	101.		SW P.C. board assembly
	102.		Sub-panel assembly
	103.		PU plate spring
	104.		Screw (PL-Z91 only)
	105.		PU plate (A)
	106.		PU plate (B)
	107.		PU spring washer
	108.		EV rod
	109.		Size rod (PL-Z91 only)
	110.		S/S rod (PL-Z91 only)
	111.		Cut rod (PL-Z81 only)
	112.		S/S spring
	113.		Rubber
	114.		Under base
	115.		Start lever

Downloaded from www.linephaze.com
- Find specs, manuals and used listings across thousands of audio products.

EXTERIOR

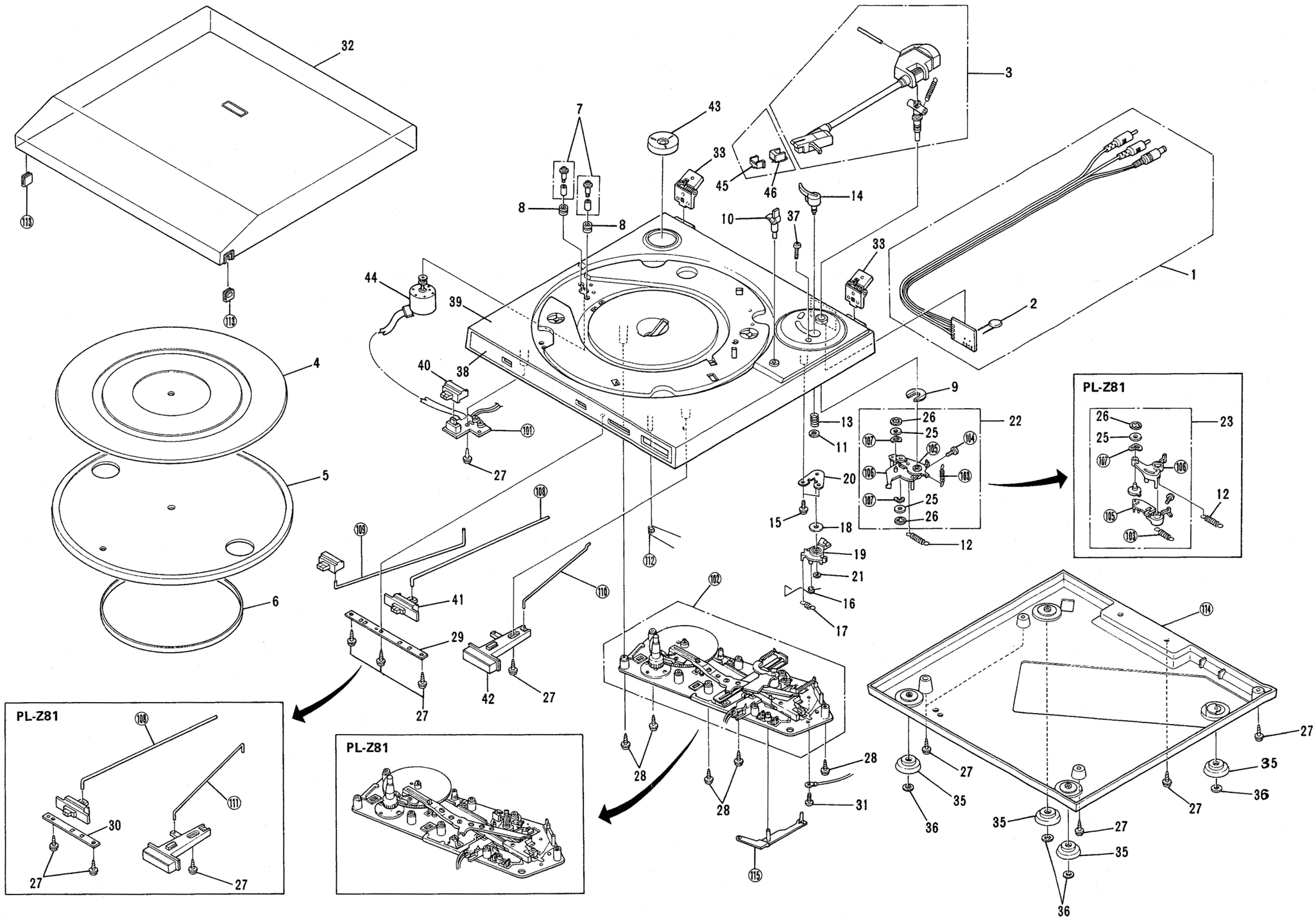

Downloaded from www.linephaze.com
- Find specs, manuals and used listings across thousands of audio products.

5.2 SUB-PANEL ASSEMBLY (PL-Z91)

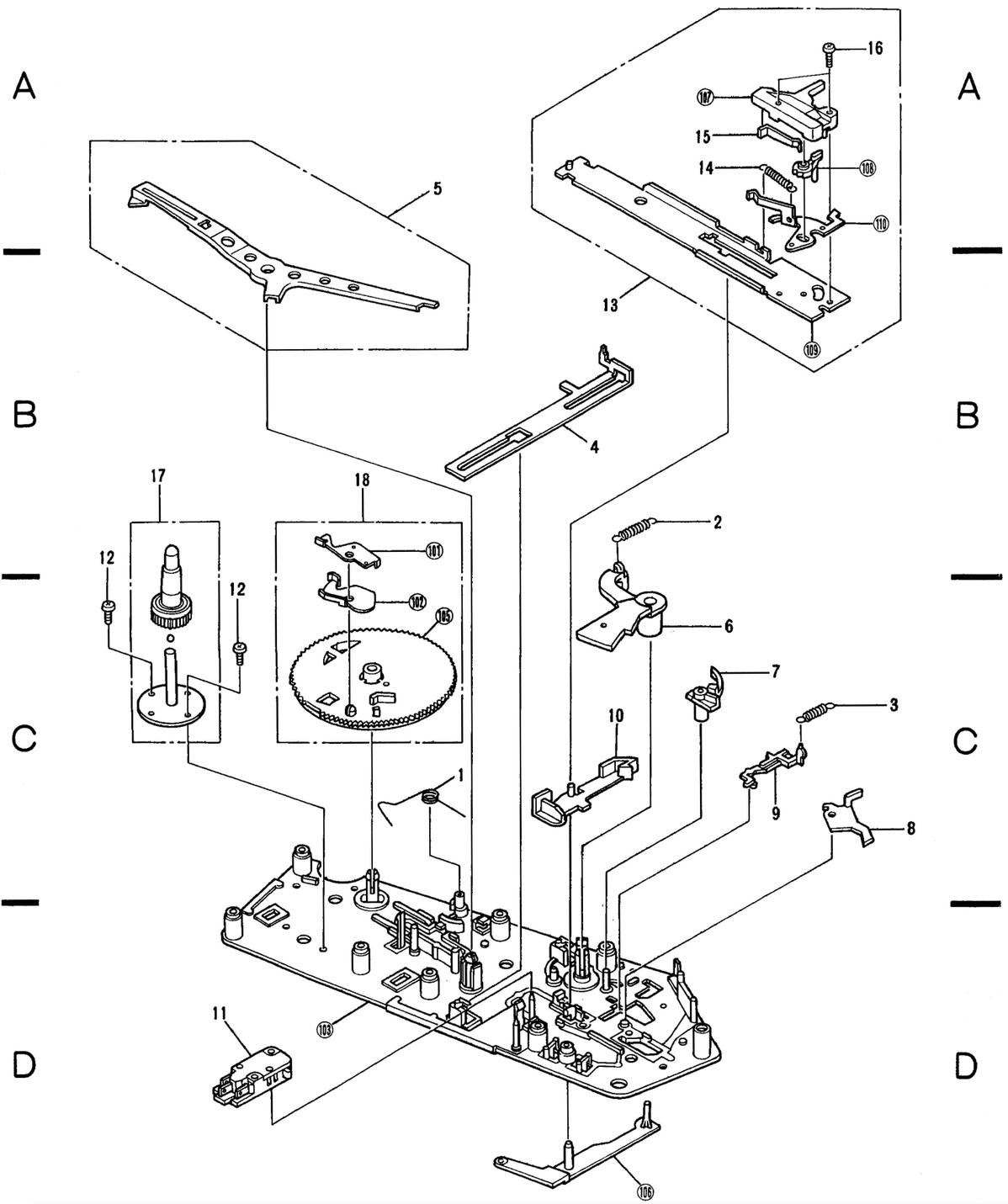

Parts List of Sub-panel (PL-Z91 and PL-Z81)

Mark	No.	Part No.	Description
	1.	PBH1040	Lock spring
	2.	PBH1053	Select lever spring (PL-Z91 only)
	3.	PBH1054	Reset plate spring (PL-Z91 only)
	4.	PNB1096	Select lever (PL-Z91 only)
	5.	PNB1098	Detector lever
	6.	PNW1296	Index cam (PL-Z91 only)
	7.	PNW1301	Switch locker
	8.	PNW1312	Reset plate (PL-Z91 only)
	9.	PNW1313	Selector (PL-Z91 only)
	10.	PNW1314	Switch lever
⚠ ★★	11.	PSF-023	Microswitch (POWER, S1)
	12.	PSZ30P060FMC	Screw
	13.	PXA1110	Drive plate assembly (For PL-Z91)
		PXA1112	Drive plate assembly (For PL-Z81)
	14.	PBH-224	Start plate spring
	15.	PBK-038	Click plate spring
	16.	PSZ30P100FMC	Screw
	17.	PXA1111	Shaft assembly
	18.	PYY1046	Cam assembly

Mark	No.	Part No.	Description
	101.		Starting plate
	102.		Signal plate
	103.		Sub-panel
	104.		.....
	105.		Cam
	106.		Start lever (PL-Z91 only)
	107.		EV cam
	108.		Lead-in ratch
	109.		Drive plate unit
	110.		Start plate

Downloaded from www.linephaze.com
- Find specs, manuals and used listings across thousands of audio products.

5.3 SUB-PANEL ASSEMBLY (PL-Z81)

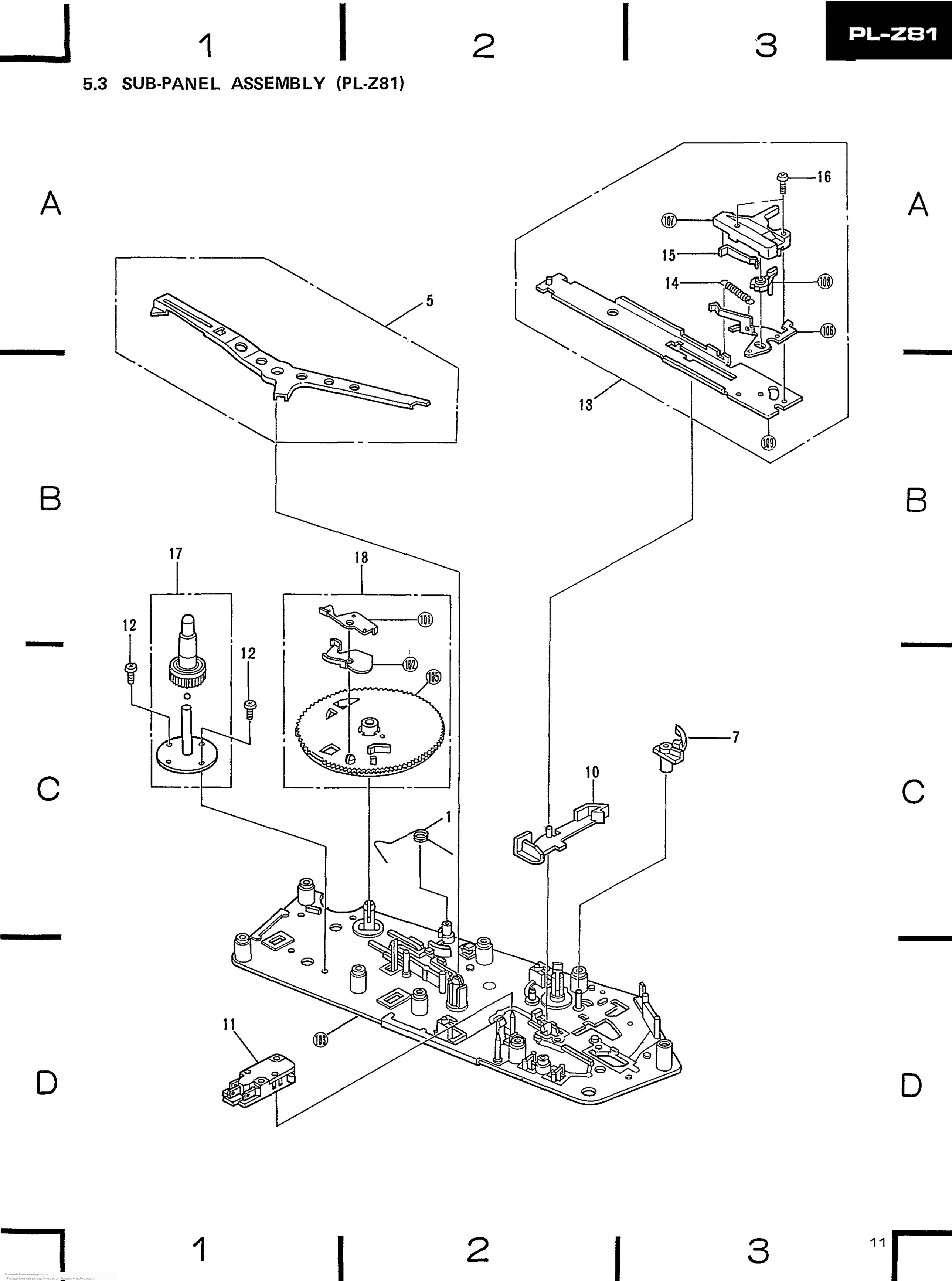

Downloaded from www.linephaze.com
- Find specs, manuals and used listings across thousands of audio products.

6. SCHEMATIC DIAGRAM

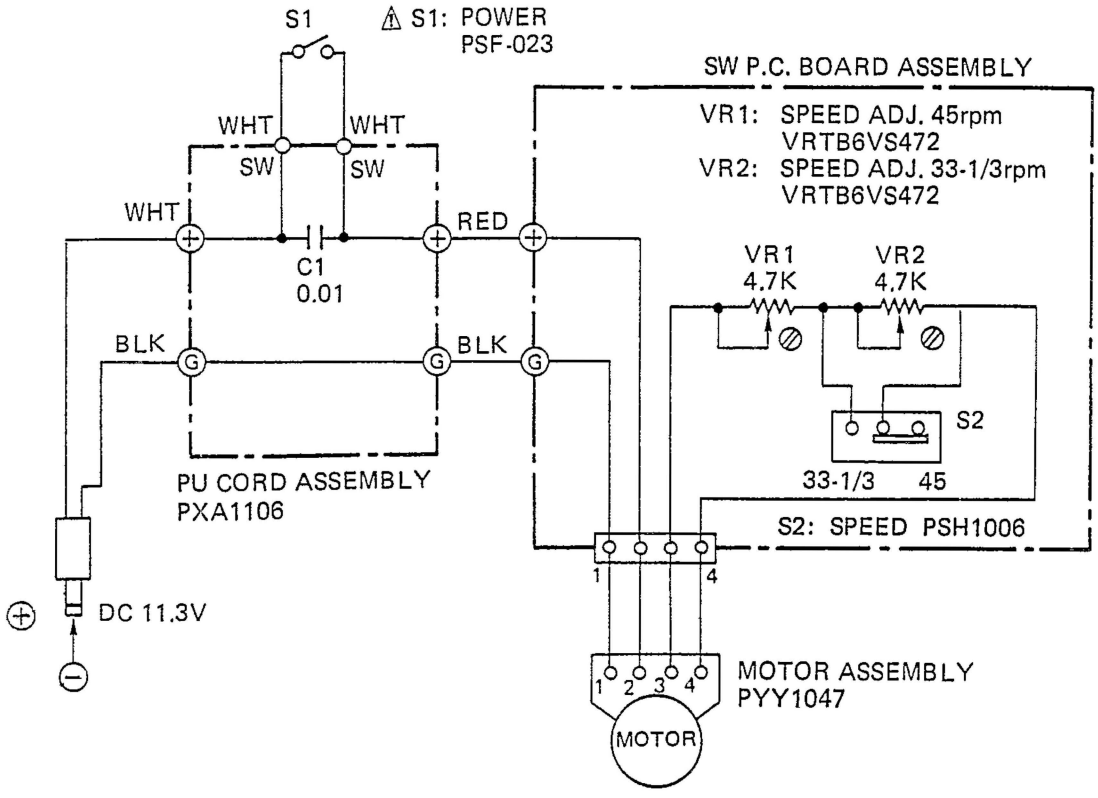

1. RESISTORS:
   Indicated in Ω, 1/8W & 1/4W, ±5% tolerance unless otherwise noted k; kΩ, M; MΩ, (F); ±1%, (G); ±2%, (K); ±10%, (M); ±20% tolerance

2. CAPACITORS:
   Indicated in capacity (μF)/voltage (V) unless otherwise noted p; pF. Indication without voltage is 50V except electrolytic capacitor.

3. VOLTAGE, CURRENT:
   ⊓; DC voltage (V) at no input signal
   Value in ( ) is DC voltage at rated power.
   mA; DC current at no input signal

4. OTHERS:
   ➡; Signal route.
   ⊘; Adjusting point.

The ⚠ mark found on some component parts indicates the importance of the safety factor of the part. Therefore, when replacing, be sure to use parts of identical designation.
* marked capacitors and resistors have parts numbers.

This is the basic schematic diagram, but the actual circuit may vary due to improvements in design.

SWITCHES:
S1: POWER ON – OFF
S2: SPEED 33-1/3 rpm – 45 rpm

The underlined indicates the switch position.

Downloaded from www.linephaze.com
- Find specs, manuals and used listings across thousands of audio products.

7. P.C. BOARDS CONNECTION DIAGRAM

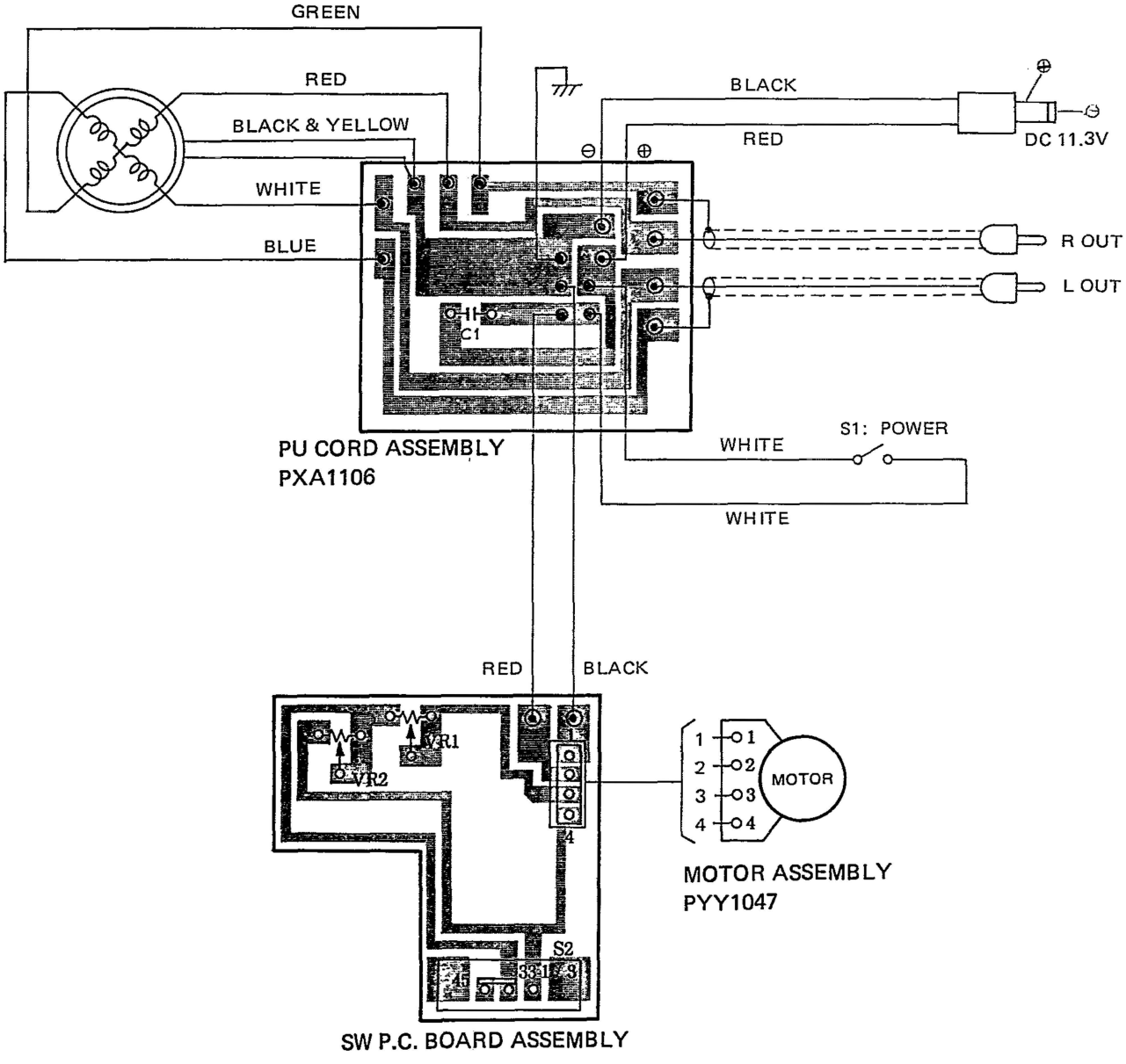

Downloaded from www.linephaze.com
- Find specs, manuals and used listings across thousands of audio products.

8. ELECTRICAL PARTS LIST

NOTES:

- *Parts without part number cannot be supplied.*
- *Parts marked by "◉" are not always kept in stock. Their delivery time may be longer than usual or they may be unavailable.*
- *The ⚠ mark found on some component parts indicates the importance of the safety factor of the part. Therefore, when replacing, be sure to use parts of identical designation.*
- *For your parts Stock Control, the fast moving items are indicated with the marks ★★ and ★.*
  ★★ GENERALLY MOVES FASTER THAN ★
  This classification shall be adjusted by each distributor because it depends on model number, temperature, humidity, etc.
- *When ordering resistors, first convert resistance values into code form as shown in the following examples.*

Ex. 1 When there are 2 effective digits (any digit apart from 0), such as 560 ohm and 47k ohm (tolerance is shown by J = 5%, and K = 10%).

560Ω	*56 × 10¹*	*561*	*RD1/4PS 5 6 1 J*
47kΩ	*47 × 10³*	*473*	*RD1/4PS 4 7 3 J*
0.5Ω	*0R5*		*RN2H 0 R 5 K*
1Ω	*010*		*RS1P 0 1 0 K*

Ex. 2 When there are 3 effective digits (such as in high precision metal film resistors).

5.62kΩ	*562 × 10¹*	*5621*	*RN1/4SR 5 6 2 1 F*

Miscellaneous Parts

Mark	Symbol & Description	Part No.
	SW P.C. board assembly	
	PU cord assembly	PXA1106
★★	Motor assembly	PYY1047

PU Cord Assembly (PXA1106)

CAPACITOR

Mark	Symbol & Description	Part No.
	C1 Ceramic capacitor	CKDYF103Z50

SW P.C. Board Assembly

SWITCH

Mark	Symbol & Description		Part No.
★★	S2	Slide switch (SPEED)	PSH1006

RESISTORS

Mark	Symbol & Description		Part No.
★	VR1, VR2	Semi-Fixed resistor	VRTB6VS472

Downloaded from www.linephaze.com
- Find specs, manuals and used listings across thousands of audio products.

9. PRECAUTIONS FOR REASSEMBLY

If new parts have been used, follow these directions and precautions when reassembling a unit after completing repairs. Also lubricate places requiring lubrication. Incorrect mounting of parts or neglecting lubrication may cause problems with the mechanical section. Follow the procedures properly.

9.1 PLACES THAT REQUIRE LUBRICATION

NOTE:
Types of lubricants and places where they are used are listed in table 1.

Type of Oil	Places used
Silicon Oil #500000	EV cam section
GYA-008	all other places requiring lubrication

Lubrication points are specified for greases other than GYA-008. Never use a different type of greases.

- **EV Cam Section**

Apply grease to the heart-shaped grooved section (rear side of the cam) and lock plate sliding section in order to minimize wear on the sliding section and the burden on the mechanism.

- **Driving Plate Assembly**

Decrease the burden on the mechanism and the wear on the sliding section.

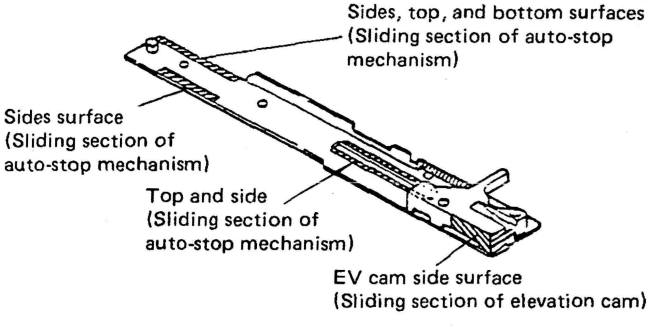

Fig. 9-1 Driving plate assembly section

- **Switch Locker Section**

Apply grease to the switch locker (hole) and sub-panel base sliding section to decrease the burden on the mechanism.

When applying grease to the hole (shaft hole), do not apply any grease 2—3mm from the button surface. If grease is applied 2—3mm within the bottom surface, it may come out the bottom and go between the switch lever and sub-panel base causing the switch lever to operate ineffectively.

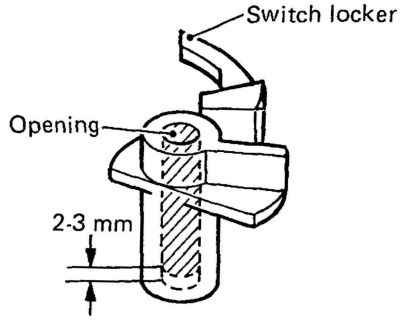

Fig. 9-2 Switch locker section

- **EV Sheet Section**

Apply grease to the elevation shaft and sliding section of the bearing.

This is to assure stability in the elevation lowering speed.

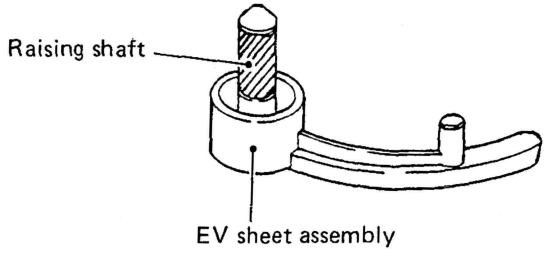

Fig. 9-3 EV sheet section

- **Elevation Cam Section**

Apply GYA-008 grease to the elevation cam and sliding section of the raising shaft to decrease the burden when operated.

Also apply silicon oil #500000 to the hole. This is to stabilize the elevation lowering speed.

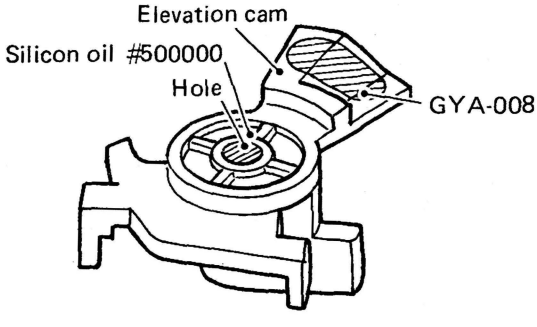

Fig. 9-4 Elevation cam section

Downloaded from www.linephaze.com
- Find specs, manuals and used listings across thousands of audio products.

- **Index Cam Section (PL-Z91 only)**

Apply grease to the index cam lower surface of the hooked section to decrease the burden on the mechanism.

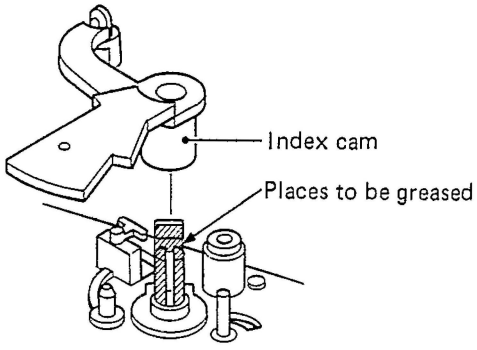

Fig. 9-5 Index cam section

- **Reset Plate Section (PL-Z91 only)**

Apply grease to the sub-panel base (shaft) and sliding section of the reset plate to decrease the burden on the mechanism.

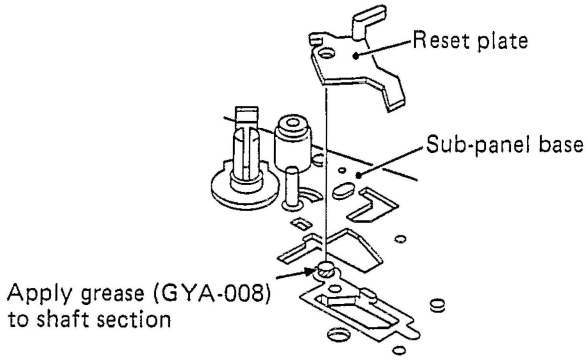

Fig. 9-6 Reset plate section

- **Other Places to be Greased (PL-Z91 only)**

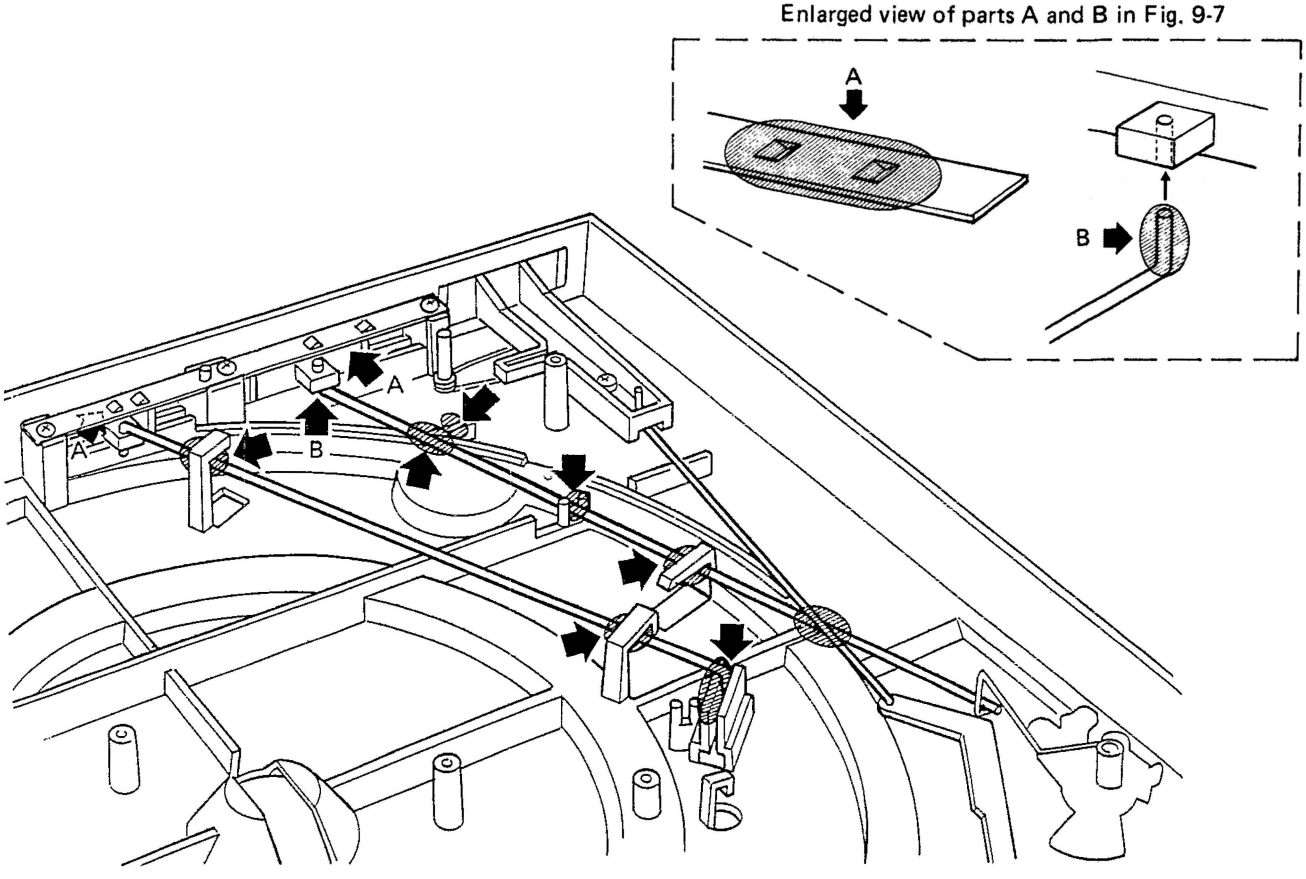

Fig. 9-7

Downloaded from www.linephaze.com
- Find specs, manuals and used listings across thousands of audio products.

- **Other Places to be Greased (PL-Z81 only)**

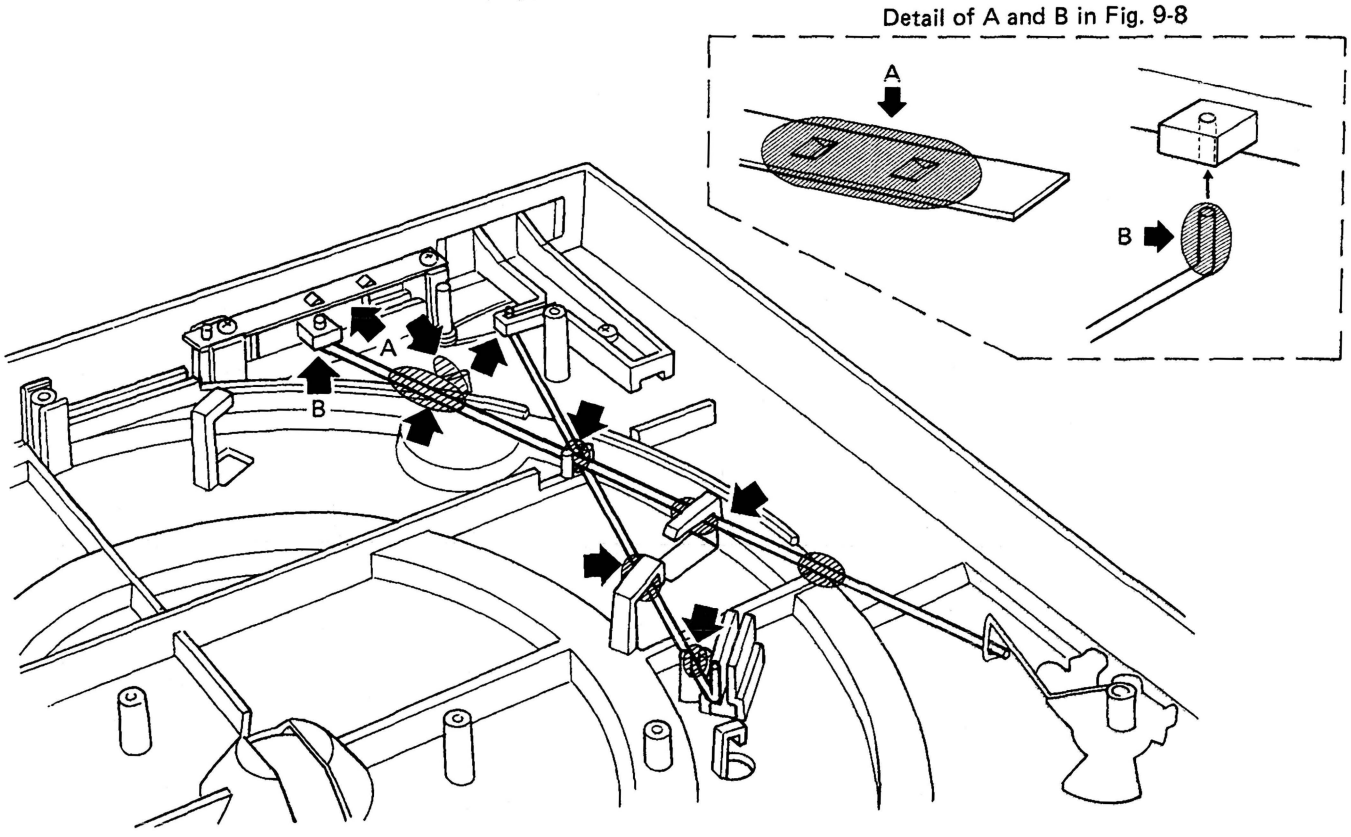

Fig. 9-8

9.2 PRECAUTIONS FOR ATTACHMENT OF PARTS AND REASSEMBLY

- **Cam Assembly Attachment**

The cam assembly is attached by letting the lock spring go in the direction Ⓐ as shown in Fig. 9-9.

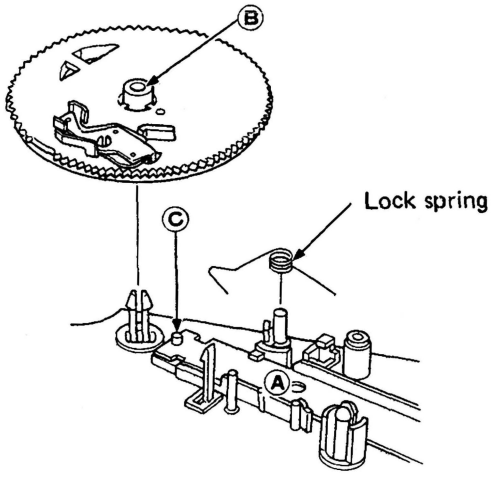

Fig. 9-9 Cam assembly attachment

- **PU Plate Assembly Attachment**

The PU plate assembly is attached with screw Ⓑ by pushing the PU plate bearing section against the arm rotating shaft fixing nut.

The attachment direction is matched to the center of the support line as shown in Fig. 9-10. (position the tonearm above the arm rest).

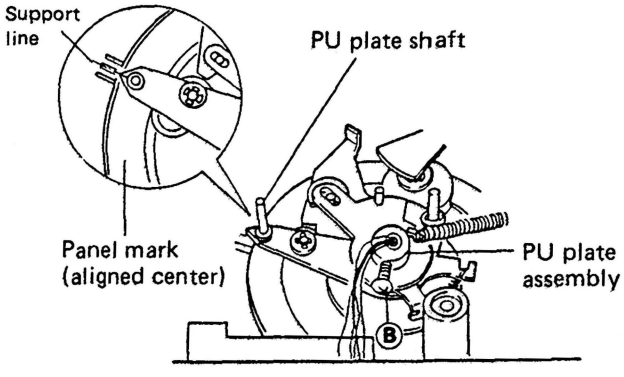

Fig. 9-10 PU plate attachment

Downloaded from www.linephaze.com
- Find specs, manuals and used listings across thousands of audio products.

- **Arm Base Attachment**

When mounting the subpanel assembly to the unit (panel), set the position of the switch locker in the subpanel assembly and the switch lever so that the microswitch (S1: for power on/off) is in the OFF position. Also set the tonearm above the arm rest. Set the arm elevator to UP. Then when the subpanel is mounted, mount the PU plate shaft in the position shown in Fig. 9-11.

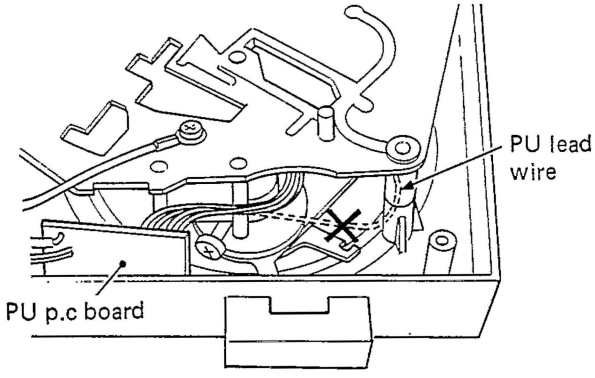

Fig. 9-11 Arm base attachment

3. MICROSWITCH LEAD WIRE STYLING CONFIRMATION (PL-Z91 only)

When attaching the mechanism assembly to the panel, be careful that the lead wires do not contact the select lever as shown in Fig. 9-12. If the lead wires contact the select lever, record size detection will malfunction.

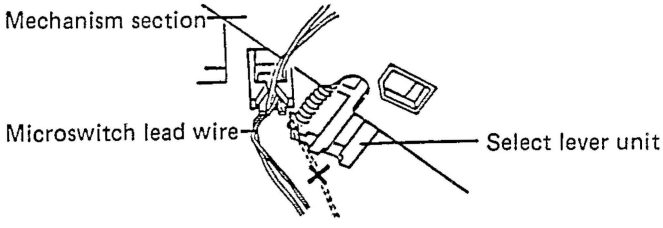

Fig. 9-12 Microswitch lead wire attachment

- **Start Lever Unit Attachment (PL-Z91 only)**

Attach the shaft section of the start lever unit as shown in Fig. 9-13 so that it comes between the reset plate and start plate.

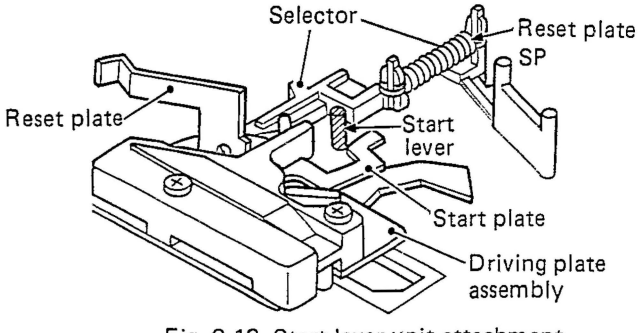

Fig. 9-13 Start lever unit attachment

- **Spindle Assembly Attachment (PL-Z91 only)**

When installing the spindle assembly, set the cam in the mechanism stop location and verify that the starting plate section (B) does not protrude beyond surface (A) of the cam. If the spindle assembly is attached with the starting plate section (B) protruding, the starting plate may be deformed, the spindle assembly pinion gear may be scratched, and the return function may be come disabled.

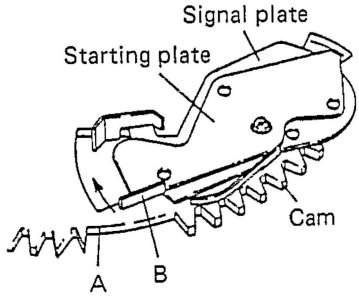

Fig. 9-14 Spindle assembly attachment

- **Installing the Cords (PL-Z91 only)**

For the styling of the PU cord assembly and other lead wiring, refer to Fig. 9-15.

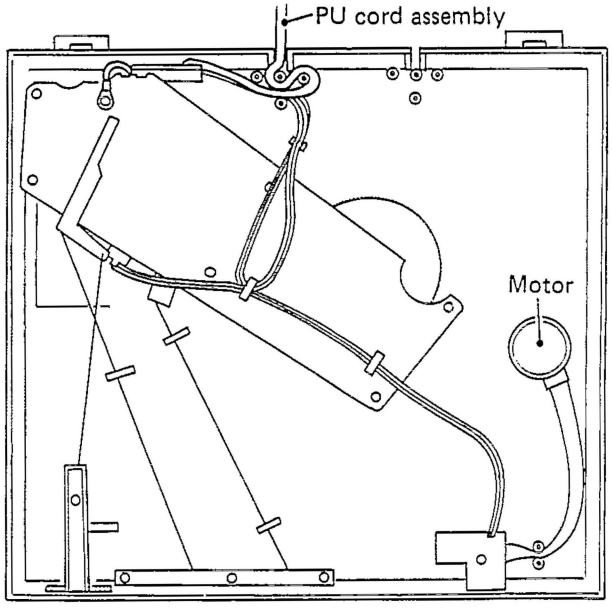

Fig. 9-15 Cords stringing

Downloaded from www.linephaze.com
- Find specs, manuals and used listings across thousands of audio products.

10. ADJUSTMENTS

10.1 MOTOR ADJUSTMENTS

Place the record player on blocks as shown in Fig. 10-1 and adjust the motor from the under base.

1. Turn the arm elevation lever up to raise the arm.
2. Place a strobo sheet on the turntable, move the arm to the turntable side, and rotate the turntable.
3. Adjust semifixed resistors VR1 and VR2 of the motor assembly so the 33-1/3 rpm and 45 rpm strobo of the strobo sheet appears to the static.
4. First adjust VR1 for 45 rpm and then the adjust VR2 for 33-1/3 rpm.

10.2 STYLUS LANDING POSITION ADJUSTMENT (PL-Z91 only)

When the tonearm doesn't land in the correct position during automatic playback, adjust according to the following procedure.

1. Place a 30cm record on the platter.
2. Press the START/STOP switch and start automatic playback. Note the landing position of the stylus. (How many mm to the inside or outside compared to the proper landing position on the platter.)
3. Depress the START/STOP switch to return the tonearm to the tonearm rest.
4. Press the arm elevation switch to raise the stylus.
5. With the adjustment hole visible, move the tonearm to the edge of the record by hand.
6. Turn the adjustment screw with a small screwdriver according to step 2 as follows:
   - When the stylus lands at the outside of the record, turn the adjustment screw clockwise.
   - When the stylus lands on the proper position toward the record center, turn the adjustment screw counterclockwise. One half turn of the adjustment screws moves the tonearm about 12mm.
7. After adjustment, press the START/STOP switch and check if the stylus landing point was correctly adjusted.
   If adjustment is incorrect, repeat steps 3 to 6.

Be careful not to damage the record and stylus when making this adjustment.

ADJUSTMENT USING A TEST RECORD

(Landing position adjustment cannot be done when the tonearm is on the record.)

30cm landing point ..... Lands between count 306 and 313.

17cm landing point ..... Lands between count 175 and 183.

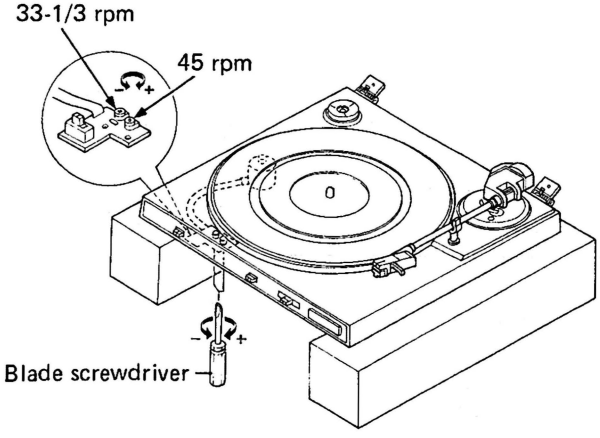

Fig. 10-1 Motor adjustment

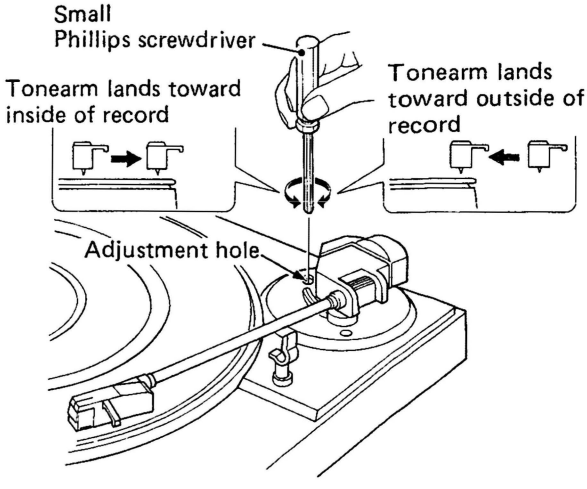

Fig. 10-2 Stylus landing point adjustment

Downloaded from www.linephaze.com
- Find specs, manuals and used listings across thousands of audio products.

10.3 AUTO-RETURN POSITION ADJUSTMENT

When the auto-return position is too near or too far, make the following adjustments.

1. Check the stylus landing position. If the stylus does not land at the correct position, adjust the landing position.
2. Set the arm elevation switch to UP and turn the auto-return adjustment screw fully counter-clockwise.
3. Move the tonearm as far as it will go toward the center.
4. When the auto-return adjustment screws is turned slowly clockwise, the tonearm will begin to move toward the center.
5. Stop turning the adjustment screw at the point at which there is a space of 32mm between the stylus of the cartridge and the center shaft. (Fig. 10-3)
6. After adjustment, check that auto-return is performed correctly and that the stylus landing position is correct.

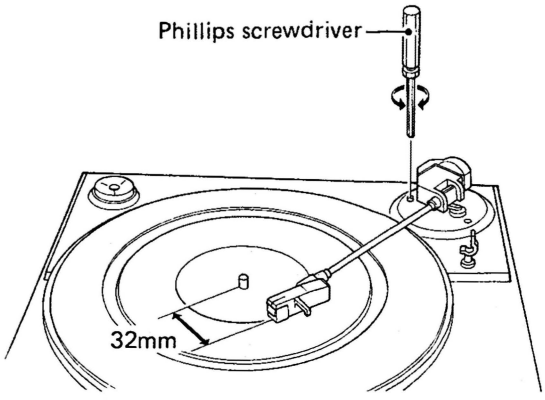

Fig. 10-3 Auto-return position adjustment

10.4 ARM ELEVATION HEIGHT ADJUSTMENT

1. Press the arm elevation switch to move the arm up.
2. Turn the height adjustment screw on the side of the arm elevation unit with a Phillips screwdriver so that the distance between the record and the stylus is 7±2mm. The arm moves up when the screw is turned counterclockwise.

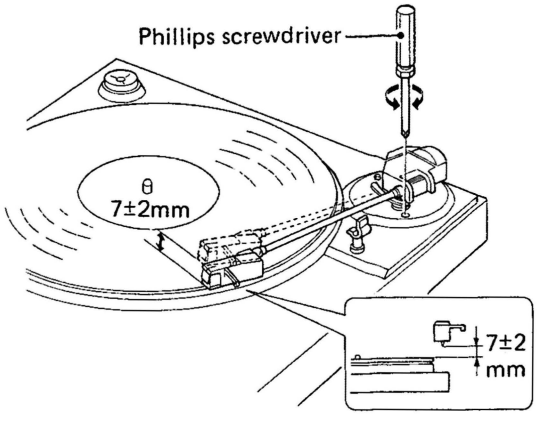

Fig. 10-4 Arm elevation adjustment

Downloaded from www.linephaze.com
- Find specs, manuals and used listings across thousands of audio products.

10. RÉGLAGES

10.1 REGLAGE DU MOTEUR

Placer le tourne-disque sur des blocs, comme est montré dans la Fig. 10-1 et régler le moteur depuis le dessous.

1. Tourner le levier de relevage du bras pour soulever le bras de lecture.
2. Placer une feuille stroboscopiques sur le tourne-disques; déplacer le bras jusqu'au côté du tourne-disque et le faire tourner.
3. Régler les résistances demi-fixes VR1 et VR2 de l'ensemble du moteur, jusqu'à ce que la feuille stroboscopique apparaisse immobile en 33-1/3 et 45 tr/min.
4. D'abord régler VR1 pour avoir la vitesse de 45 tr/min, ensuite, régler VR2 pour 33-1/3 tr/min.

10.2 REGLAGE DE LA POSITION DE DESCENTE DE LA POINTE DE LECTURE (PL-Z91 uniquement)

Lorsque le bras de lecture ne descend pas sur la position correcte lors de la lecture automatique, réaliser le réglage en suivant la procédure suivante.

1. Placer un disque de 30 cm sur le plateau.
2. Appuyer sur la touche de marche/arrêt (START/STOP) et faire débuter la lecture automatique. Noter l'endroit du point de descente. (Nombre de mm vers l'intérieur ou vers l'extérieur par rapport au point de descente normal.)
3. Appuyer sur la touche START/STOP pour faire retourner le bras de lecture sur son support.
4. Appuyer sur la touche de relevage du bras pour soulever la pointe de lecture.
5. En ayant l'orifice de réglage visible, déplacer à la main le bras de lecture vers la périphérie du disque.
6. Tourner la vis de réglage à l'aide d'un petit tournevis, en fonction du point 2, comme suit:
   - Lorsque la pointe de lecture descend vers l'extérieur du disque, tourner la vis de réglage dans le sens des aiguilles d'une montre.
   - Lorsque la pointe de lecture descend vers l'intérieur du disque, tourner la vis de réglage dans le sens contraire des aiguilles d'une montre.

     Un demi-tour de la vis de réglage correspond à un déplacement d'environ 12mm du bras de lecture.
7. Après le réglage, appuyer sur la touche START/STOP et vérifier si le réglage de la position de descente a été correctement effectué.

   Si le réglage n'est pas correct, répéter les étapes 3 à 6.

Prendre soin de ne pas endommager le disque ni la pointe de lecture en réalisant ce réglage.

REGLAGE AU MOYEN D'UN DISQUE D'ESSAI

(Le réglage du point de descente ne peut être réalisé lorsque le bras de lecture est sur le disque.)

Point de descente
pour 30cm ..... Descente entre les valeurs 306 et 313.

Point de descente
pour 17cm ..... Descente entre les valeurs 175 et 183.

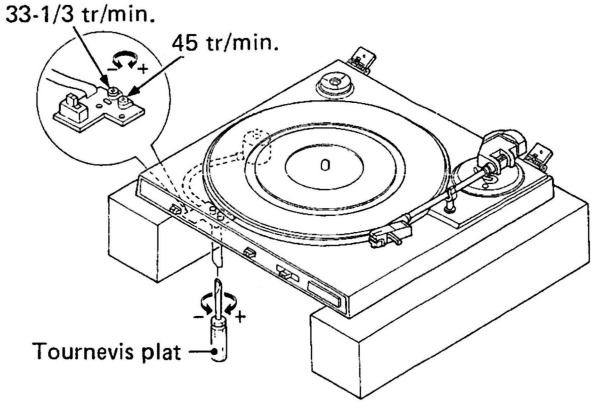

Fig. 10-1 Réglage du moteur

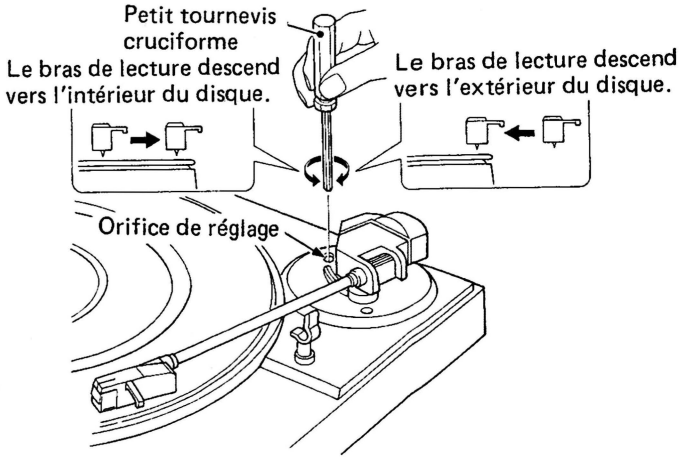

Fig. 10-2 Réglage du point de descente de la pointe de lecture

Downloaded from www.linephaze.com
- Find specs, manuals and used listings across thousands of audio products.

10.3 REGLAGE DE LA POSITION DE RETOUR AUTOMATIQUE

Réaliser les réglages suivants lorsque la position de retour automatique se produit trop près ou loin.

1. Contrôler la position de descente de la pointe de lecture. Si la pointe de lecture ne descend pas sur la position correcte, ajuster la position de descente.
2. Régler la touche de relevage du bras sur la position "UP" et tourner la vis de réglage du retour automatique à fond dans le sens contraire des aiguilles d'une montre.
3. Déplacer le bras de lecture le plus possible vers l'intérieur.
4. Lorsque la vis de réglage du retour automatique est tournée lentement dans le sens des aiguilles d'une montre, le bras de lecture commence à se déplacer vers le centre.
5. Arrêter de tourner la vis de réglage sur le point pour lequel il y a un écart de 32mm entre la pointe de lecture et l'axe central. (Fig. 10-3)
6. Après le réglage, vérifier que le retour automatique se réalise correctement et que la position de descente de la pointe est correcte.

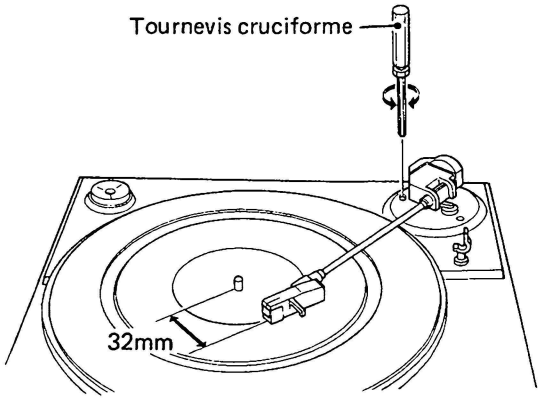

Fig. 10-3 Réglage de retour automatique

10.4 REGLAGE DE L'ELEVATION DU BRAS

1. Appuyer sur le commutateur d'élévation du bras pour déplacer le bras vers le haut.
2. Tourner la vis du côté du bloc d'élévation du bras au moyen d'un tournevis cruciforme, de telle sorte que la distance entre le disque et la pointe de lecture soit de 7±2mm. Le bras se déplace vers le haut lorsque l'on tourne la vis dans le sens contraire des aiguilles d'une montre.

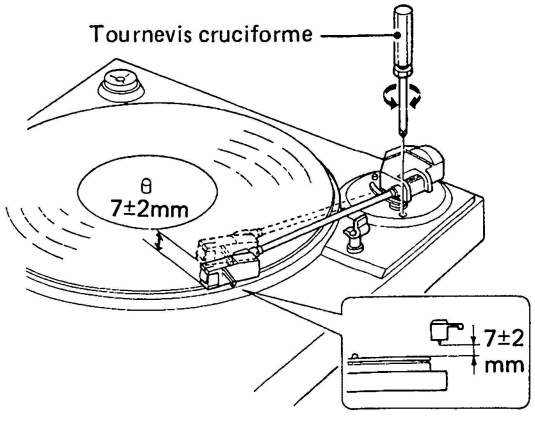

Fig. 10-4 Réglage de l'élévation du bras

Downloaded from www.linephaze.com
- Find specs, manuals and used listings across thousands of audio products.

10. AJUSTE

10.1 AJUSTES DEL MOTOR

Poner el giradiscos sobre bloques como se muestra en la Fig. 10-1 y ajustar el motor desde abajo.

1. Girar la palanca de elevación del brazo para elevar el brazo fonocaptor.
2. Poner una lámina estroboscópica sobre el plato, mover el brazo hacia el plato y hacer girar el plato.
3. Ajustar los resistores semifijos VR1 y VR2 del conjunto del motor de modo que el estrobo de 33-1/3 y 45 rpm y la lámina estroboscópica parezcan parados.
4. Primero ajustar VR1 a 45 rpm luego VR2 a 33-1/3 rpm.

10.2 AJUSTE DE LA POSICION DE DESCENSO DE LA AGUJA (Solo PL-Z91)

Cuando el brazo fonocaptor no desciende en la posición correcta durante la reproducción automática, ajustar de acuerdo con el procedimiento siguiente.

1. Poner un disco de 30cm sobre el plato.
2. Presionar el interruptor de inicio/parada (START/STOP) e iniciar la reproducción automática. Notar la posición de descenso de la aguja. (Cuántos mm hacia el interior o exterior de la posición de descenso apropiada de la aguja.)
3. Presionar el interruptor de inicio/parada (START/STOP) para hacer volver el brazo fonocaptor a su soporte.
4. Presionar el interruptor de elecación del brazo para hacer ascender la aguja.
5. Con el orificio de ajuste visible, desplazar el brazo fonocaptor hacia el borde exterior del disco con la mano.
6. Girar el tornillo de ajuste con un destornillador pequeño de acuerdo con el paso 2 del modo siguiente:
   - Cuando la aguja desciende fuera del disco, girar el tornillo de ajuste hacia la derecha.
   - Cuando la aguja desciende en el interior del disco, girar el tornillo de ajuste hacia la izquierda.

     Media vuelta de los tornillos de ajuste desplaza el brazo fonocaptor unos 10mm.
7. Después del ajuste, presionar el interruptor de reproducción/parada (PLAY/STOP) y comprobar si el punto de descenso de la aguja se ha ajustado correctamente.

   Si el ajuste es incorrecto, repetir los pasos 3 al 6.

Tener cuidado de no dañar el disco ni la aguja al efectuar este ajuste.

AJUSTE EMPLEANDO UN DISCO DE PRUEBA

(El ajuste de la posición de descenso no puede efectuarse con el brazo fonocaptor sobre su el disco.)

Punto de descenso para 30cm ..... Desciende entre el cómputo 306 y 313.

Punto de descenso para 17cm ..... Desciende entre el cómputo 175 y 183.

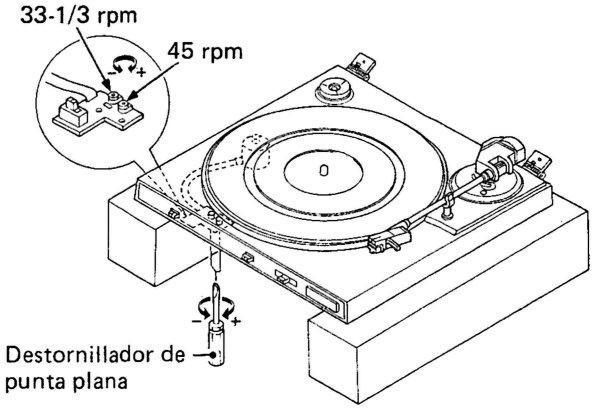

Fig. 10-1 Ajuste del motor

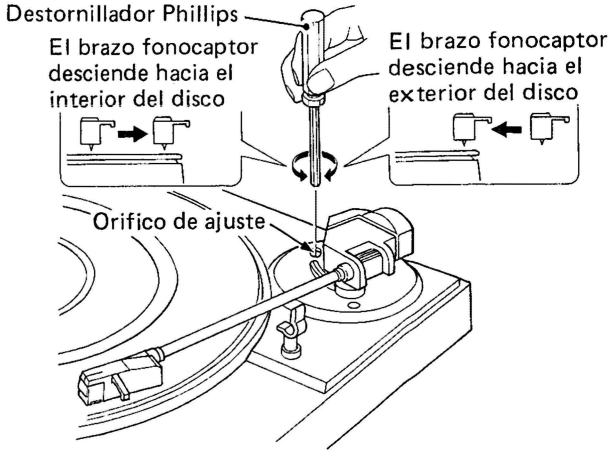

Fig. 10-2 Ajuste del punto de descenso de la aguja

Downloaded from www.linephaze.com
- Find specs, manuals and used listings across thousands of audio products.

10.3 AJUSTE DE RETORNO AUTOMATICO

Cuando la posición de retorno automático esté demasiado cerca o demasiado lejos, efectuar los ajustes siguientes.

1. Comprobar la posición de descenso de la aguja. Si la aguja no desciende en la posición correcta, ajustar la posición de descenso.
2. Ajustar el interruptor de elevación del brazo en la posición UP y girar el tornillo de ajuste de retorno automático completamente hacia la izquierda.
3. Desplazar el brazo fonocaptor hacia el centro.
4. Cuando se giran lentamente los tornillos de ajuste de retorno automático hacia la derecha, el brazo fonocaptor emplezará a moverse hacia el centro.
5. Dejar de girar el tornillo de ajuste en el punto en el que haya un espacio de 32mm entre la aguja de la cápsula y el eje central. (Fig. 10-3)
6. Después del ajuste, compronar que la operación de retorno automático se efectúe correctamente y que la posición de descenso de la aguja sea la correcta.

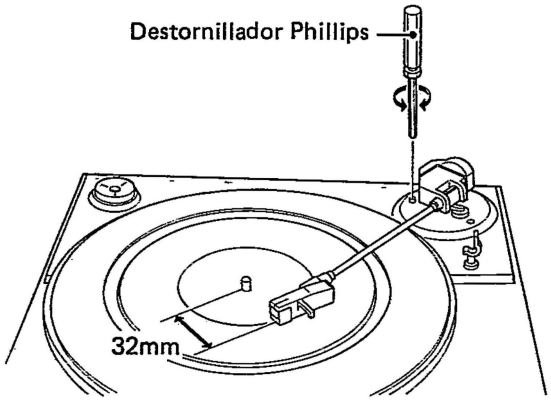

Fig. 10-3 Ajuste de retorno automático

10-4 AJUSTE DEL BRAZO DE FONOCAPTOR

1. Presionar el conmutador de elevación del brazo de fonocaptor para desplazar el brazo hacia arriba.
2. Girar el tornillo de ajuste en el lado de la unidad de elevación del brazo por medio de un destornillador Phillips, de modo que la distancia entre el disco y la aguja sea de 7±2mm. El brazo se desplaza hacia arriba girando el tornillo en sentido contrario al de las agujas del reloj.

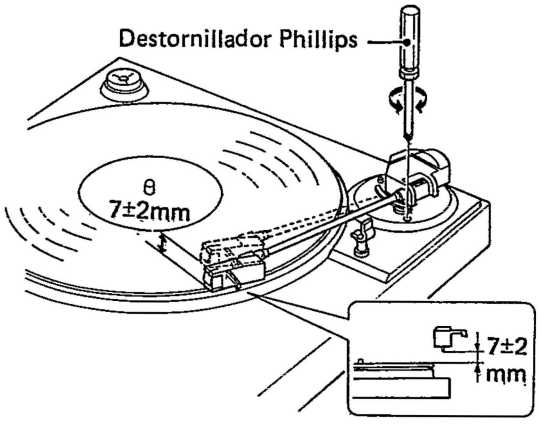

Fig. 10-4 Ajuste del brazo de fonocaptor

Downloaded from www.linephaze.com
- Find specs, manuals and used listings across thousands of audio products.

Downloaded from www.linephaze.com
- Find specs, manuals and used listings across thousands of audio products.

Downloaded from www.linephaze.com
- Find specs, manuals and used listings across thousands of audio products.