Downloaded from www.linephaze.com - Find specs, manuals and used listings across thousands of audio products.

A-8031

Ref. No. 3477

ONKYO® SERVICE MANUAL

Integrated Stereo Amplifier
MODEL A-8031

UP	230V AC, 50Hz

SAFETY-RELATED COMPONENT WARNING!!

COMPONENTS IDENTIFIED BY MARK ⚠ ON THE SCHEMATIC DIAGRAM AND IN THE PARTS LIST ARE CRITICAL FOR RISK OF PARTS.
WHOSE PARTS NUMBERS APPEAR AS SHOWN IN THIS MANUAL.

MAKE LEAKAGE-CURRENT OR RESISTANCE MEASUREMENTS TO DETERMINE THAT EXPOSED PARTS ARE ACCEPTABLY INSULATED FROM THE SUPPLY CIRCUIT BEFORE RETURNING THE APPLIANCE TO THE CUSTOMER.

TABLE OF CONTENTS

Specifications ····· 2
Adjustment procedures ····· 3
IC block diagram ····· 4
Front panel facilities ····· 7
Chassis exploded view ····· 8
Printed circuit board parts list ····· 11
Parts list of packing ····· 14
Printed circuit board view ····· 15
Block diagram ····· 19
Schematic diagram ····· 21
Precautions ····· 23

ONKYO®
AUDIO COMPONENTS

SPECIFICATIONS

Power Output :	40 watts per channel, min. RMS,at 8 ohms, both channels driven from 20 Hz to 20 kHz, with no more than 0.08% THD.	
	2 × 70 watts at 4 ohms . 1 kHz (DIN)	
	2 × 53 watts at 8 ohms . 1 kHz (DIN)	
Total Harmonic Distortion :	0.08% at rated power	
Intermodulation Distortion :	0.08% at rated power	
Damping Factor :	150 at 8 ohms (1 kHz)	
Input Sensitivity /Impedance:	Phono:	2.5 mV / 50 kohms
	CD/Tuner/Line:	150 mV / 25 kohms
	Tape Play:	150 mV / 25 kohms
Output Sensitivity / Impedance :	Tape Rec:	150 mV / 3 kohms (Phono)
Phono Overload :	135 mV RMS. at 1kHz, 0.1% THD. (REC)	
Tone Control :	BASS:	±8 dB at 100 Hz
	TREBLE:	±8 dB at 10 kHz
	Loudness Control:	+ 8 dB at 100 Hz
		+ 8 dB at 10 kHz
Frequency Response :	CD, Tuner :	15 Hz ~ 50 kHz ±1dB
Signal to Noise Ratio (IHF-A) :	Phono:	84 dB (5.0 mV input)
	CD (DIRECT):	104 dB (0.5V input)
Power Supply :	AC 230V, 50 Hz	
Dimensions (W×H×D) :	455×150×332 mm	
	17-15/16"×5-7/8"×13-1/16"	
Weight :	7.8 kg, (17.2 lbs.)	

Specifications and features are subject to change without notice

Downloaded from www.linephaze.com - Find specs, manuals and used listings across thousands of audio products.

Downloaded from www.linephaze.com - Find specs, manuals and used listings across thousands of audio products.

ADJUSTMENT PROCEDURES

Adjustments and Checking the Protection Circuitry

1. Preparations

1) Place the unit on the workbench. (There should be about 15 mm of space between the base plate of the unit and the work surface.)
2) Set up the unit as follows.
   (1) No load
   (2) No signal
   (3) Volume turned all the way down
   (4) Speaker switch OFF
   (5) Power switch OFF

Note) Check the following points before making adjustments
   (1) The power switch should be OFF.
   (2) The interior of the unit should not be warm.

2. Idling current adjustment

1) Turn the power switch ON and allow the unit to warm up for about 10 minutes.
   (1) Adjust R531 (R532) so that the voltage at test point P503 (P504) on the NAAF-4933 circuit board is 7.5mV ± 2.5mV.

NOTE) Semi-fixed resistors enclosed in parentheses ( ) are for the right channel.

3. Check of operation of protection circuitry

1) Check of operation of protection relay.
   (1) Confirm that the relay turns ON approximately 5 seconds after the power switch is turned ON.
   (2) The relay should turn OFF approximately 0.5 seconds after the power switch is turned OFF.
2) Check of DC detection
   (1) Turn the power on with no load.
   (2) After the speaker relay turns ON, apply DC +1 ~ 1.5V to the CD input terminals. Confirm that the relay turns OFF.
   (3) Confirm that operation is the same as (2) above when an input of DC −1 ~ −1.5V is applied.

Note) Under no circumstances connect a load or short the speaker terminals when performing the above test.

3) Confirmation of current detection operation
   (1) Signal input from the circuit illustrated below with no load.
   (2) Confirm that the speaker relay does not turn OFF even when a 2 ohm load is connected when a peak value of 35Vp is output.
   (3) Next, confirm that when a 1 ohm load is connected the speaker relay switches OFF and ON a couple of times and then stays OFF.

Note) The period before that relay stays OFF should not last for more than 10 second.
Relay OFF status can be canceled by switching the power OFF.

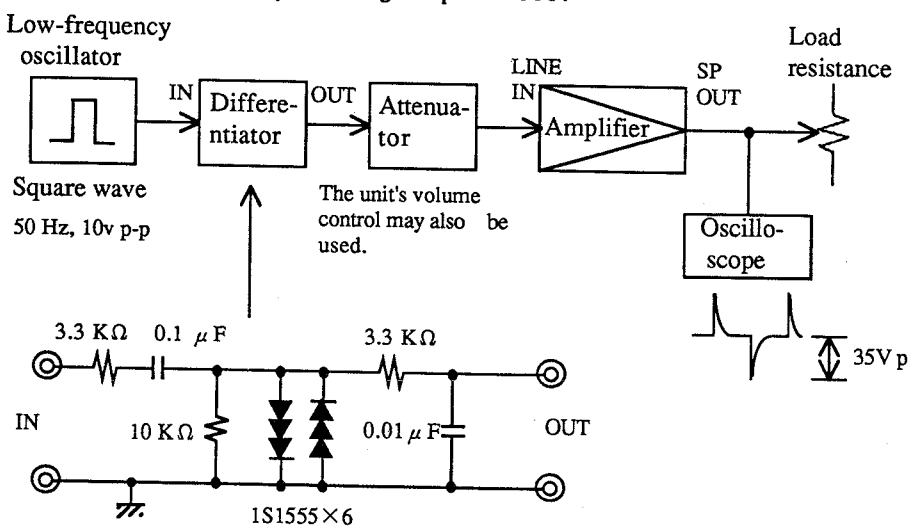

Downloaded from www.linephaze.com - Find specs, manuals and used listings across thousands of audio products.

IC BLOCK DIAGRAM

HD404314A33S

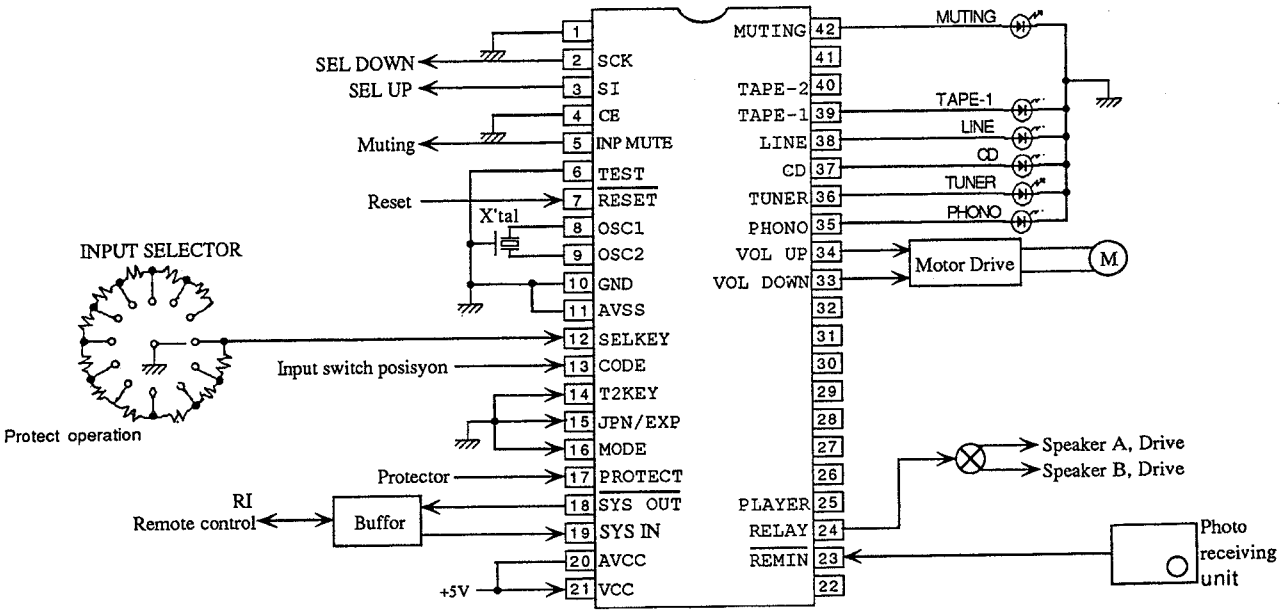

HD404314

Pin No.	CODE	FUNCTION	I / O	DESCRIPTION
1	RA1/Vdisp	------	-----	Not used, To be connected with GND.
2	R00/SCK	SEL DOWN / CL	OUT	UP/DOWN Output terminal for Input selector.
3	R01/SI	SEL UP / D1		
4	R02/SO	CE	-----	
5	R03/TOC	INP MUT	OUT	Muting output terminal. Active "H".
6	TEST	TEST	-----	Shipment Test. To be connected with GND.
7	$\overline{\text{RESET}}$	$\overline{\text{RESET}}$	IN	Input terminal for Reset signal. Active "L"
8	OSC1	Xtal	-----	Terminal for connecting with Ceramic oscillator (4MHz)
9	OSC2	Xtal	-----	
10	GND	GND	-----	Ground terminal
11	AVss	AVss	-----	Ground terminal of A/D converter
12	R30/AN0	SELKEY	IN	Input terminal for when changing over Input Selector. Through A/D conversion, the selector will be detector on its right or left rotation.
13	R31/AN1	CODE	IN	Code input terminal for detecting position of Rotary switch of Motor drive.
14	R32/AN2	T-2KEY	IN	Tape-2 Key entry terminal.
15	R33/AN3	JPN/EXP	IN	Input terminal for change-over between Japan model and Export model.

OPERATION	SEL UP	SEL DOWN
STOP	H	H
UP	H	L
DOWN	L	H

Downloaded from www.linephaze.com - Find specs, manuals and used listings across thousands of audio products.

Pin No.	CODE	FUNCTION	I / O	DESCRIPTION
16	R40/AN4	MODE	IN	Input terminal for initialization to change over operation mode.
17	R41/AN5	PROTECT	IN	Input terminal for detecting protect operation.
18	R42/AN6	$\overline{\text{SYS OUT}}$	OUT	Output terminal for System Code.
19	R43/AN7	SYS IN	IN	Input terminal for System Code.
20	AVcc	AVcc	-----	Analog reference voltage for A/D conversion.
21	Vcc	+5V	-----	Power(+5V) terminal .
22	D0/INTO	$\overline{\text{POFF}}$	IN	Input terminal for Detecting Power suspension. However, "L" 100 μ S or under shall be ignored.
23	D1/INT1	$\overline{\text{REM IN}}$	IN	Remote control signal input terminal
24	D2/EVENB	RELAY	OUT	Output terminal for controlling relay. "H" when ON.
25	D3/BUZZ	PLAYER	OUT	Output terminal for Player control. H" will be output for 200mS if input PLAY/REJECT code for Remote control and set Input selector for PHONO.
26	D4/STOPC	------	-----	Not used
27	D5			
28	D6			
29	D7			
30	D8			
31	R80			
32	R81			
33	R81	VOL DOWN	OUT	UP / DOWN output terminal for Volume. Active "H".
34	R83	VOL UP		

OPERATION	VOL UP	VOL DOWN	
STOP	H	H	POWER ON
VOL UP	H	L	POWER ON
VOL DOWN	L	H	POWER ON
POWER OFF	L	L	

35	R10	PHONO	OUT	Output terminal for Input selector LED. Active "H".
36	R11	TUNER		
37	R12	CD		
38	R13	LINE		
39	R20	TAPE-1		
40	R21	TAPE-2	-----	Not used
41	R22	------	-----	Not used
42	R23	MUTING	OUT	Output terminal for Audio muting LED, Remote control

TA7291S (Volume Moter Drive)

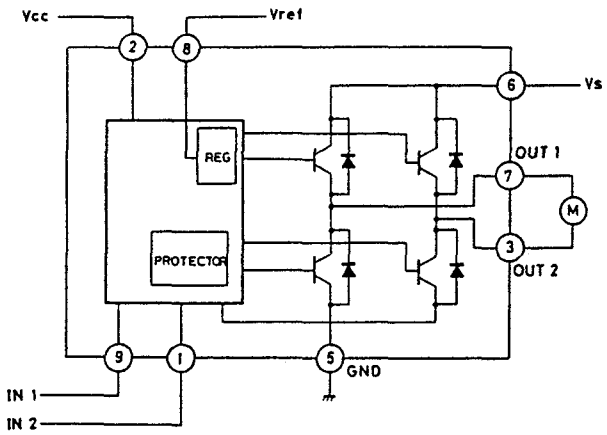

INPUT		OUTPUT		MODE
IN 1	IN 2	OUT 1	OUT 2	
0	0	∞	∞	STOP
1	0	H	L	CW/CCW
0	1	L	H	CCW/CW
1	1	L	L	BRAKE

CCW: Counter clockwise direction
CW: Clockwise direction

LC78228N

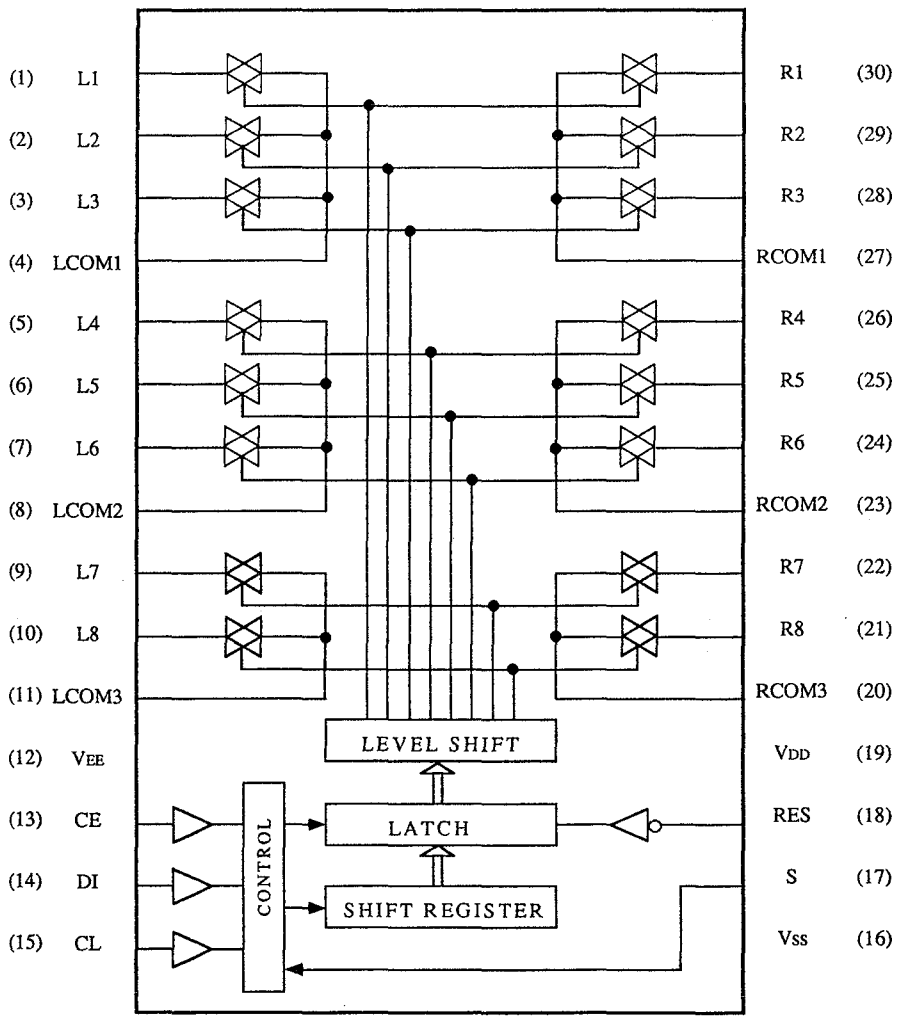

Downloaded from www.linephaze.com - Find specs, manuals and used listings across thousands of audio products.

Downloaded from www.linephaze.com - Find specs, manuals and used listings across thousands of audio products.

FRONT PANEL

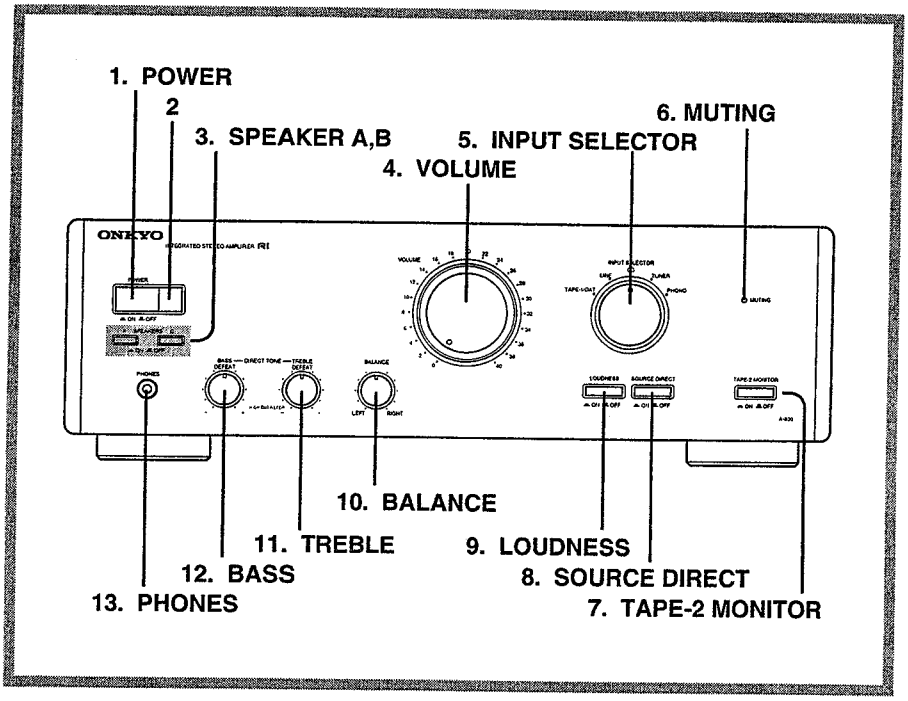

For more information about buttons or knobs, turn to page number listed in the [ ].

Front panel

1. **Power button**
2. **Remote control sensor**
3. **Speaker selector buttons**
4. **Volume control knob**
5. **Input selector knob and indicator**
6. **Muting indicator**
7. **TAPE-2 Monitor button**
8. **Source Direct button**
9. **Loudness button**
10. **Balance control knob**
11. **Treble control knob**
12. **Bass control knob**
13. **Headphone jack**

REMOTE CONTROL

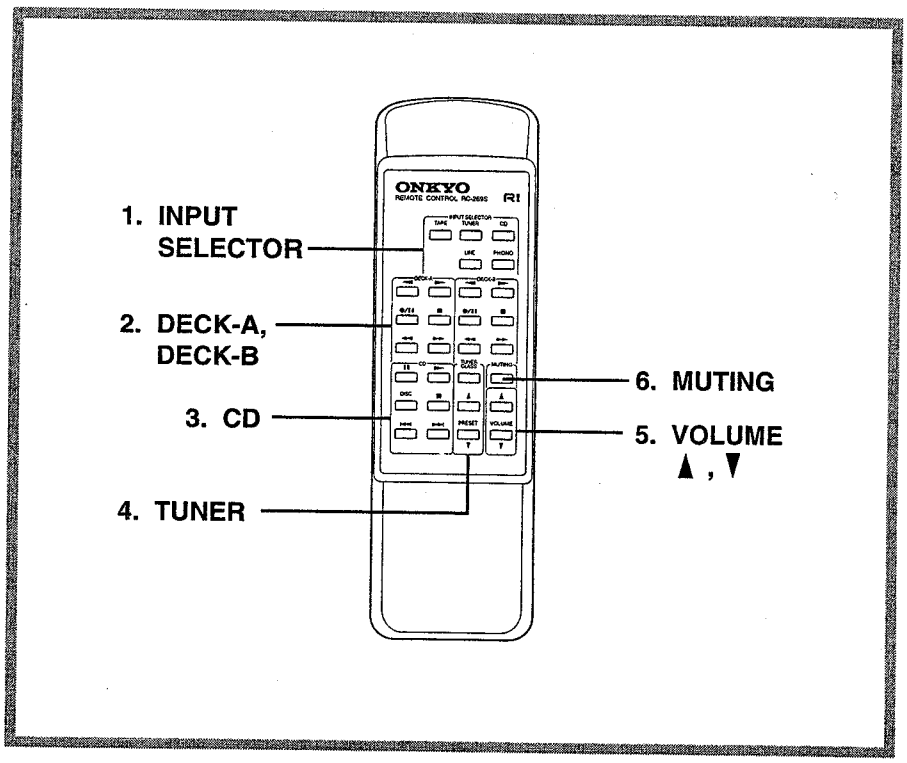

Remote control

1. **Input selector buttons**
2. **Tape operation buttons**
   - ◄ : Reverse play button
   - ► : Forward play button
   - ◄◄ : Fast rewind button
   - ►► : Fast forward button
   - ■ : Stop button
   - ●/❚❚ : Record/pause button
3. **CD operation buttons**
   - ❚❚ : Pause button
   - ► : Play button
   - DISC : Disc button for CD changer
   - ■ : Stop button
   - ⏮ : Down button
   - ⏭ : Up button
4. **Tuner operation buttons**
   - CLASS : Class selector button
   - PRESET : Preset memory ▲(up)/▼(down)
5. **Volume control buttons**
6. **Audio muting button**

CHASSIS-EXPLODED VIEW - PARTS LIST

REF.NO.	PART NO.	DESCRIPTION
A001	27110785C	FRONT BRACKET
A002	28191593-1	CLEAR PLATE (RE)
A004	27100274	CHASSIS
A005	27270375	t0.2 X Ø3.8 X Ø9, SPACER
A006	27130730	BRACKET (PT)
A008	27130724	BRACKET (C)
A009	27121862	REAR PANEL (P)
A010	27300750	#2271, CORD BUSHING
A012	27160334	HEAT SINK
A015	28170039	CE-016, BUSHING
A017	28170038	BUSHING
A018	27190940A	HOLDER (CH)
A020	27273155	JOINT (POW)
A021	27273154A	JOINT(DIR)
A030	834430088	3TTS+8B(BC), SCREW
A031	834430108	3TTS+10B(BC), SCREW
A032	834430088	3TTS+8B(BC), SCREW
A033	801433	3SMS8W.SW+14B(BC), SCREW
A034	834430089	4TTC+8C(BC), SCREW
A036	27270374	t1.0 X Ø9.5 X Ø4, SPACER
A301	28184553A	COVER
A302	28141296	t1.5 X 25 X 170, CUSHION
A303	28140816	t1.5 X 80 X 160, CUSHION
A304	834430088	3TTS+8B(BC)
A501	1A509121Y	FRONT PANEL ASS´Y
(A502)	28135199Y	BADGE
(A503)	8910301	CS-3(SUS), CS RING
(A504)	28125255A	END CAP (L)
(A505)	28125256A	END CAP (R)
(A506)	28198798	FACET (SEL)
(A508)	28198778	FACET
A510	28153118	BOTTOM BOARD
A513	27175251-1	LEG ASS´Y
A801	28324140	KNOB (POW)
A802	28324882	KNOB (SP)
A803	28324883	KNOB (VOL)
A804	28324884A	KNOB (SEL)
A806	28324886	KNOB (D)
A807	28324887A	KNOB (TONE)
S701	25030359	NRSF-112-20RM, ROTARY SWITCH
Q521, Q522	2201783 or	2SC3854-O or
	2201784 or	2SC3854-Y or
	2201786	2SC3854-P, TRANSISTOR
Q523, Q524	2201773 or	2SA1490-O or
	2201774 or	2SA1490-Y or
	2201776	2SA1490-P, TRANSISTOR
⚠ T901	2301000Y	NPT-1204P, Power transformer
⚠ T901	2301001Y	NPT-1204DG, Power transformer

REF.NO.	PART NO.	DESCRIPTION
⚠ P901	253193HITY	AS-CEE, AC CORD
⚠ F902	252074Y	2A-SE-EAK, FUSE (230V) (P,W)
U001	1A508533-1A	NAAF-4933-1, Main circuit pc board ass´y
U002	1A508534-1	NADG-4934-1, Microprocessor pc board ass´y
U003	1A508535-1	NASW-4935-1, Tone control circuit pc board ass´y
U004	1A508536-1	NAETC-4936-1, Volume control circuit pc board ass´y
U005	1A508537-1A	NAPS-4937-1A, Power supply circuit pc board ass´y
U006	1A508538-1	NAETC-4938-1, Muting indicator pc board ass´y
U007	1A508539	NASW-4939-1, Voltage selector switch pc board ass´y (W)
U008	1A508540-1	NASW-4940-1, Input selector switch pc board ass´y

NOTE: (P): 230V MODEL ONLY
(W): WORLDWIDE MODEL ONLY

NOTE: THE COMPONENTS IDENTIFIED BY MARK ⚠ ARE CRITICAL FOR RISK OF FIRE AND ELECTRIC SHOCK. REPLACE ONLY WITH PART NUMBER SPECIFIED.

Downloaded from www.linephaze.com - Find specs, manuals and used listings across thousands of audio products.

CHASSIS-EXPLODED VIEW

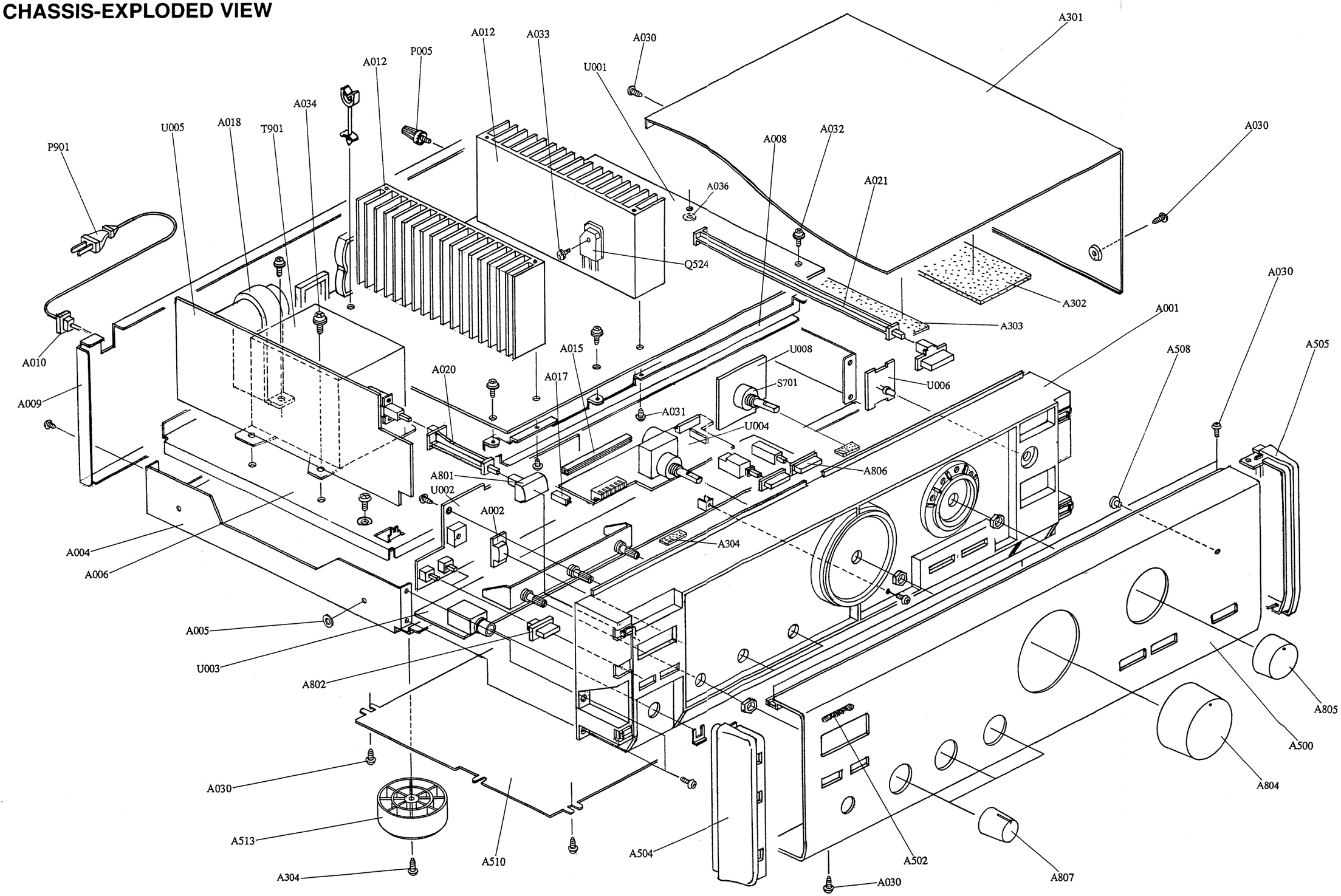

Downloaded from www.linephaze.com - Find specs, manuals and used listings across thousands of audio products.

Downloaded from www.linephaze.com - Find specs, manuals and used listings across thousands of audio products.

PRINTED CIRCUIT BOARD PARTS LIST

MAIN CIRCUIT PC BOARD(NAAF-4933-1A)

CIRCUIT NO.	PAR NO.	DESCRIPTION
	ICs	
Q105	22240191	NJM4565D-D
Q201	22240270Y	LC7822N
	Transisors	
Q101-Q104	2211782Y or	2SA991-F
	2211783Y	2SA991-E
Q501-Q503	2213677Y or	2SC3067-G
	2213678Y	2SC3067-H
Q505-Q508	2211455Y or	2SA1015-GR
	2214905	2PA1015-GR
Q509, Q510	2211732Y or	2SC1845-F
	2211733Y	2SC1845-E
Q511, Q512	2211255Y or	2SC1815-GR
	2214915	2PC1815-GR
Q513, Q514	2211353Y or	2SA949-O
	2211354Y	2SA949-Y
Q515, Q516	2211633Y or	2SC2229-O
	2211634Y	2SC2229-Y
Q517, Q518	2211653Y or	2SC2235-O
	2211654Y	2SC2235-Y
Q519, Q520	2211643Y or	2SA965-O
	2211644Y	2SA965-Y
Q525, Q526	2211732Y or	2SC1845-F
	2211733Y	2SC1845-E
Q527	2211792Y or	2SA992-F
	2211793Y	2SA992-E
Q528, Q529	2211732Y or	2SC1845-F
	2211733Y	2SC1845-E
Q531, Q532	2213284Y or	2SC1740S-R
	2212115Y	2SC2458-GR
Q601-Q603	2213650Y	DTD113ZS
	Diodes	
D101-D104	223163Y or	1SS133 or
D501-D504	223205Y or	1SS270A or
	223222	WG713A
D551	224450512Y	MTZ5.1B, Zener
D601-D603	223163Y or	1SS133 or
	223205Y or	1SS270A or
	223222	WG713A
	Coils	
L501, L502	231209SY	S-0.4A
L301, L302	230905Y	BL02RN1-R62
	Capacitors	
C101, C102	374721015Y	100pF, 50V, Film(TF)
C103, C104	374722224Y	2200pF, 50V, Film(TF)
C105, C106	354780479Y	4.7µF, 50V, Elect.
C107, C108	374722215Y	220pF, 50V, Film(TF)
C109, C110	374723315Y	330pF, 50V, Film(TF)
C111, C112	374728224Y	8200pF, 50V, Film(TF)
C113, C114	354724719Y	CE04W6.3V
C115, C116	374721134Y	0.011µF, 50V, Film(TF)
C117, C118	371123034Y	0.33µF, 50V, Mylar
C119, C120	354780479Y	4.7µF, 50V, Elect.
C121, C122	374721224Y	1200pF, 50V, Film(TF)
C201-C206	374721015Y	100pF, 50V, Film(TF)
C213-C216		
C351, C352	354741019Y	100µF, 16V, Elect.
C501, C502	354780479Y	4.7µF, 50V, Elect.(VX)
C503-C506	374721015Y	100pF, 50V, Film(TF)
C507, C508	374721024Y	1000pF, 50V, Film(TF)
C509, C510	354742219Y	220µF, 16V, Elect.
C511, C512	354781019Y	100µF, 50V, Elect.
C517-C520	374722234Y	0.022µF, 50V, Film(TF)
C525, C526	373794744S	0.047µF, 63V, Film(MKT)
C529, C530	354781019Y	100µF, 50V, Elect.
C531, C532	354782219Y	220µF, 50V, Elect.
C533, C534	374724734Y	0.047µF, 50V, Film(TF)
C535, C536	374724744Y	0.47µF, 50V, Film(TF)
C541-C544	374721024Y	1000pF, 50V, Film(TF)
C554	354780479Y	4.7µF, 50V, Elect.
C555	354722219Y	220µF, 6.3V, Elect.
C601, C602	374724734Y	0.047µF, 50V, Film(TF)
C920, C921	354744719Y	470µF, 16V, Elect.
	Resistors	
R527, R528	443522704Y	27ohms, 1/2W, Meatal oxide film
R529, R530	443529104Y	91ohms, 1/2W, Meatal oxide film
R531, R532	5210261Y	N06HR5KBC, Semi-fixed
R535, R536	443522714Y	270ohms, 1/2W, Meatal oxide film
R539-R542	4000076	0.22ohms, 5W, Meatal plate
R543-R546	453530224Y	2.2ohms, 1/2W, Meatal
R547, R548	453530824Y	8.2ohms, 1/2W, Meatal
R549, R550	453530564Y	5.6ohms, 1/2W, Meatal
R553, R554	443521804Y	18ohms, 1/2W, Meatal oxide film
R555, R556	443522704Y	27ohms, 1/2W, Meatal oxide film
R571, R572	443623914Y	390ohms, 1W, Meatal oxide film
R601, R602	443627514Y	750ohms, 1W, Meatal oxide film
R603	443522724Y	2.7kohms, 1/2W, Meatal oxide film
	Switches	
S101	25035294Y	NPS-122-L260
	Relays	
RL601, RL602	25065485Y	NRL-2P2A
RL603	25065470Y	NRL-2P1A
	Jumper sockets	
JL201b, JL571b	25050267Y	NSCT-3P95
JL502b, JL703b	25050267Y	NSCT-3P95
JL501b	25050271Y	NSCT-7P99
	Plugs	
P201	25055493	NPLG-2P468
P503, P504	25055038Y	NPLG-2P29
P512a	25055167Y	NPLG-4P151
	Pin jacks	
P101	25045401	NPJ-2PDBL226
P201	25045410	NPJ-6PDBL236
P251, P252	25045411	NPJ-4PDBL235
	Jack	
P801	25045330	NPJ-2PDBL184
	Terminal	
P501	25060125	NTM-8PDMN058
	Plate	
	27141059Y	Ground
	Holder	
JL701a	25050237Y	NSCT-9P101, Wire
	27190540-1	Clamp

MICROPROCESSOR PC BOARD(NADG-4934-1)

CIRCUIT NO.	PART NO.	DESCRIPTION
	Remote control sensor	
Q751	24130010Y	HC-312
	ICs	
Q351	22240239	TA7291S
Q701	22240788	HD404314A33S
		HD4074318419A (OTM)
	Transistors	
Q702, Q703	2213510TY	DTA114ES
Q705	2213284TY	2SC1740S-R
	Diodes	
D351	22380046T	AM01Z
	22380035T	GP104003E
D701-D703	223163TY or	1SS133 or
	223205TY or	1SS270A or
	223222T	WG713A
D704	224450562TY	MTZ5.6B, Zenar
D705, D706	223163TY or	1SS133 or
	223205TY or	1SS270A or
	223222T	WG713A
	Resonator	
X701	3010150TY	CST4.00MGW
	Coils	
L701, L702	230905Y	BL02RN1-R62
	Capacitors	
C701	354741009TY	10µF, 16V, Elect.
C702	375524744TY	0.47µF, 50V, Film(MMT)
C703	3000075TY	0.047F, 5.5V, Super
C706	354781099TY	0.1µF, 50V, Elect.
C707	354780109TY	1µF, 50V, Elect.
C708	354741009TY	10µF, 16V, Elect.
	Resistor	
		R-NET, 100kohms x 19(for OTM)
		R-NET, 100kohms x 18(for OTM)
	417341044TY	1/16W, 100kohms, Carbon(for OTM)
	Switches	
S601, S602	25035653Y	NPS-122-L605
	Plug	
P701a	25055660Y	NPLG-13P616
	Wire holder	
JL704a	25051113	NSCT-9P900
JL702a	25051109	NSCT-5P896

TONE CONTROL CIRCUIT PC BOARD(NASW-4935-1)

CIRCUIT NO.	PART NO.	DESCRIPTION
	Capacitors	
C301-C304	374721634TY	0.016µF, 50V, Film(TF)
C305, C306	374721824TY	1800pF, 50V, Film(MMT)
C307, C308	374728234TY	0.082µF, 50V, Film(MMT)
C311, C312	374722724TY	2700pF, 50V, Film(MMT)
	Resistors	
R301	5148107AY	N16RGMC250KMN25, Variable
R302	5142002Y	N16RGM11C100K25, Variable
R303	5144011Y	N16RQM11C70K88K25, Variable
	Switches	
S301	25035407Y	NPS-122-L371
S302	25035654AY	NPS-162-L606
	Jack	
P571	25045164	HLJ4317-01-3020
	Wire holder	
JL201a, JL571a	25051107	NSCT-3P894
JL301a	25051114	NSCT-10P901
JL501a	25051111	NSCT-7P898
	Plat	
	27150364Y	Shield

VOLUME CONTROL CIRCUIT PC BOARD(NAETC-4936-1)

CIRCUIT NO.	PART NO.	DESCRIPTION
	Transistors	
Q353, Q354	2213631T or	RN1241-A or
	2213632T	RN1241-B
	Coils	
L351, L352	230905Y	BL02RN1-R62
	Resistors	
R351(R352)	5104329AY	N16RGM
	Socket	
P701b	25051047Y	NSCT-13P834
	Jumper socket	
JL301b	25051114	NSCT-10P901
JL701b	25051113	NSCT-9P900

POWER SUPPLY CIRCUIT PC BOARD(NAPS-4937-1A, -1B)

CIRCUIT NO.	PART NO.	DESCRIPTION
	ICs	
Q901	222780055Y	78M05HF
Q902	222780565JRC	78M56
	Transistors	
Q911	2201944Y or	2SD1763-D or
	2201945Y or	2SD1763-E or
	2201946Y	2SD1763-F
Q912	2201934Y or	2SB1186-D or
	2201935Y or	2SB1186-E or
	2201936Y	2SB1186-F
	Diodes	
D901	22380022F	RBV402
D904-D909	22380046T or	AM01Z or
	22380035T	GP104003E
D913, D914	224451503TY	MTZ15C, Zenar
D915	224450512TY	MTZ5.1B, Zenar
	Coil	
L901	231069A	NCH-1119

PRINTED CIRCUIT BOARD VIEW FROM BOTTOM SIDE

NAAF-4933 Main circuit

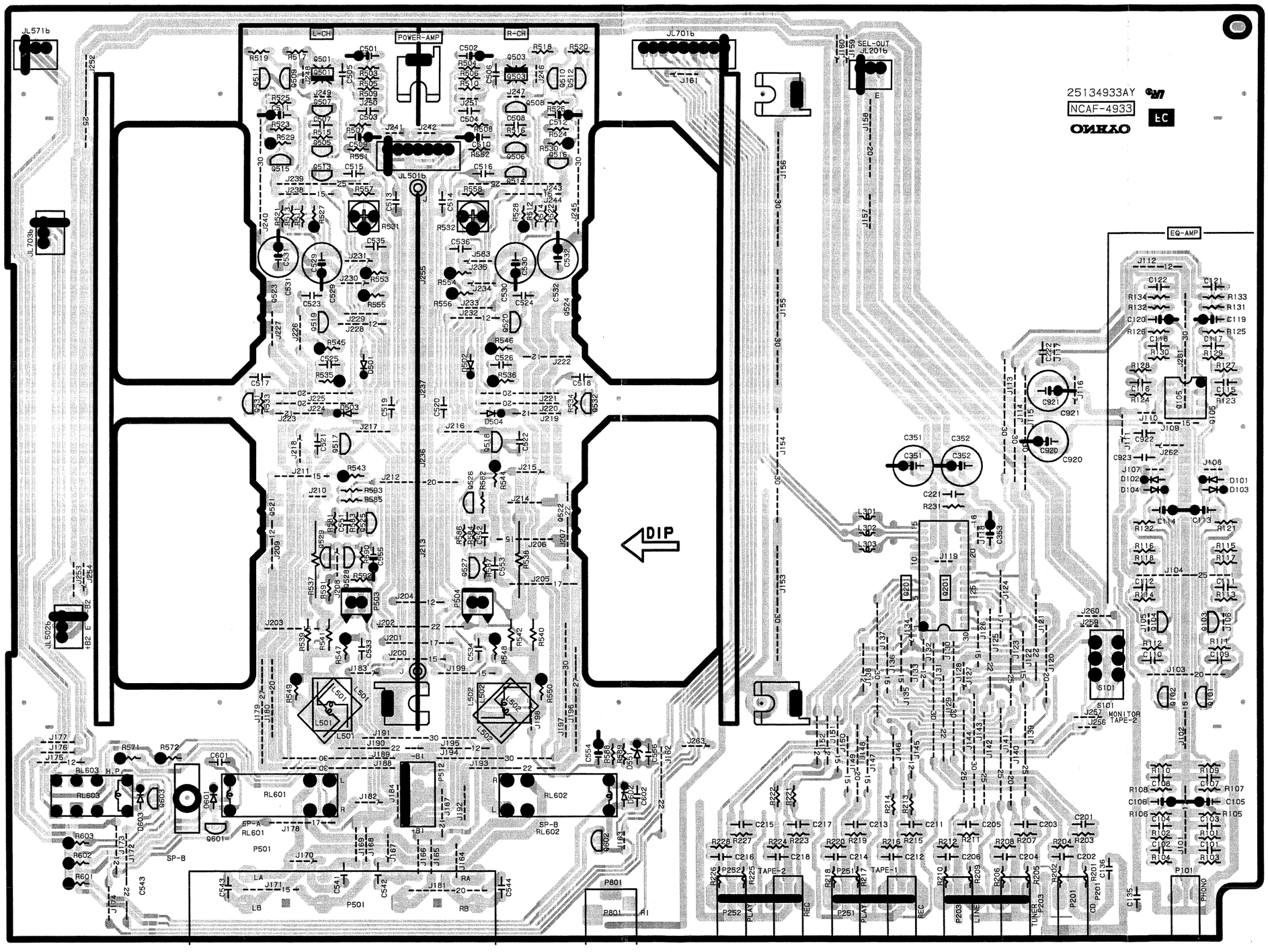

Downloaded from www.linephaze.com - Find specs, manuals and used listings across thousands of audio products.

Downloaded from www.linephaze.com - Find specs, manuals and used listings across thousands of audio products.

CIRCUIT NO.	PART NO.	DESCRIPTION
	Capasitors	
⚠ C901	3500065AY	0.01µF, AC400V/125V, Film(IS)
⚠ C902	3500163	WY2472MCMCF0K, Film(IS)
C903, C904	374723344TY	0.33µF, 50V, Film(ME)
C905	374733344T	0.33µF, 100V, Film(ME)
C906, C907	3504270	6800µF, 50V, Elect.
C908	374721034TY	0,01µF, 50V, Film(TF)
C909	354742229SY	2200µF, 16V, Elect.
C914	374721034TY	0.01µF, 50V, Film(TF)
C915, C916	354782219TY	220µF, 50V, Elect.
C917, C918	354761009TY	10µF, 35V, Elect.
C921	354744709TY	47µF, 16V, Elect.
C922	354741009TY	10µF, 16V, Elect.
	Resistors	
R901, R902	453530224TY	2.2ohms, 1/2W, Metal
R903	443521024TY	1kohms, 1/2W, Metal oxide film
R911, R912	443623924TY	3.9ohms, 1W, Metal oxide film
R913, R914	443621024TY	1kohms, 1W, Metal oxide film
R921	443521224TY	1.2kohms, 1/2W, Metal oxide film
R922	443524714TY	470ohms, 1/2W, Metal oxide film
R923	443521024TY	1kohms, 1/2W, Metal oxide film
R931, R932	441720624FY	6.2ohms, 2W, Metal oxide film
	Switches	
⚠ S901	25035550Y	NPS-111-L51P
	Fuse holders	
⚠ F902a	25050065Y	YSH403T
	Plug	
⚠ P902	25055675Y	NPLG-2P631
	Wire holder	
JL502a	25051107	NSCT-3P894
JL703a	25051107	NSCT-3P894
	Jumper socket	
JL702b	25050269Y	NSCT-5P97
	Socket ass'y	
P512	2009990301AY	NSAS-4P0435

MUTING INDICATOR PC BOARD(NAETC-4938-1)

CIRCUIT NO.	PART NO.	DESCRIPTION
	Diode	
D751	225291DT	SEL4910D-D
	Wire holder	
JL706b	25051107	NSCT-3P894

INPUT SELECTOR SWITCH PC BOARD (NASW-4940-1)

CIRCUIT. NO.	PART NO.	DESCRIPTION
	Diodes	
D711	225291DT	SEL4910D-D
D712	225291DT	SEL4910D-D
D713	225291DT	SEL4910D-D
D714	225291DT	SEL4910D-D
D715	225291DT	SEL4910D-D
	Switch	
S701	25030359Y	NRSF-112-20RM, Rotary
	Wire holders	
J704b	25051113	NSCT-9P900
JL706a	25051107	NSCT-3P894

NOTE:
THE COMPONENTS IDENTIFIED BY MARK ⚠ ARE CRITICAL FOR RISK OF FIRE AND ELECTRIC SHOCK. REPLACE ONLY WITH PART NUMBER SPECIFIED.

PARTS LIST OF PACKING

REF.NO.	PART NO.	DESCRIPTION
A851	29052736	CARTON BOX
A853	29052735	PAD(L)
A854	29091651B	PAD(R)
A857	29091652B	PAPER TAPE (W=30)
A860	282321 or	STAPLE or
	282301	STAPLE
A861	29100034-1	POLY-VINYL BAG
A868	29110071 or	PP TAPE or
	29110098	PP TAPE
	<ACCESSARY BAG ASS'Y>	
	29341939	INSTRUCTION MANUAL
	29365020	WARRANTY CARD
	29100094B	POLY BAG (WARRANTY)
	24140269	RC-269S, REMOTE CONTROL TRANSMITTER
	3010194	UM-3, TWO BATTERIES
	2010200	CONNECTION CABLE (3.5 MINI PLUG)
	29100097-1	350×250, POLY-VINYL BAG
	25055040	CV-K-2, CONVERSION PLUG [W]

NOTE: [P] : 230V MODEL ONLY
[W] : WORLD WIDE MODEL ONLY

Downloaded from www.linephaze.com - Find specs, manuals and used listings across thousands of audio products.

NASW-4935 Tone control circuit

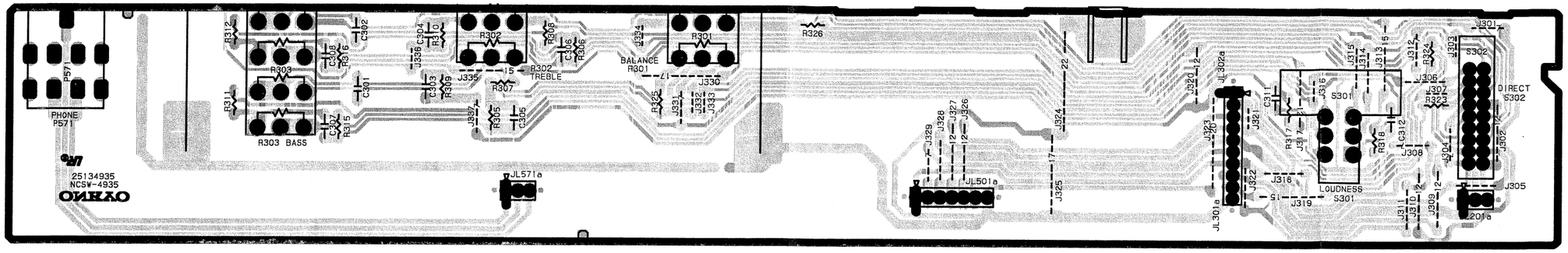

NAPS-4937 Power supply circuit

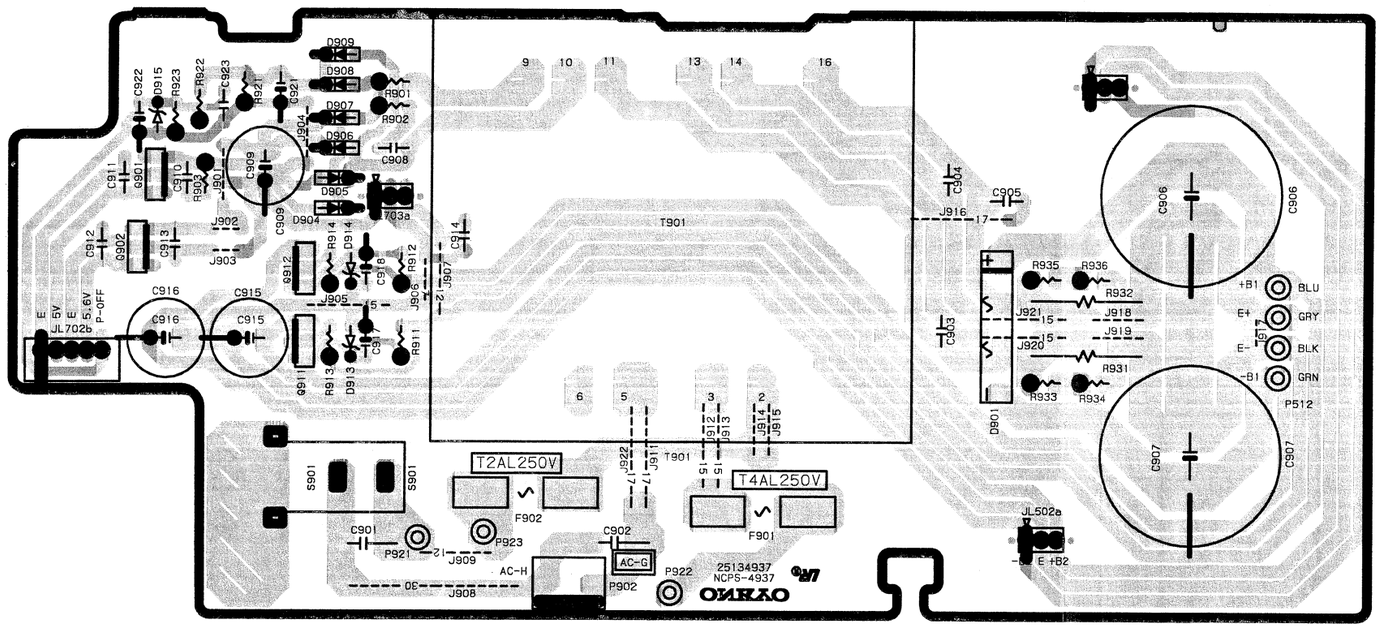

NAETC-4938 Muting Ind.

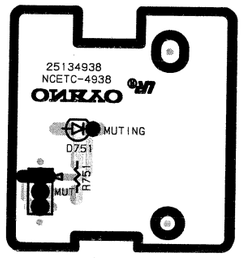

NASW-4939 Voltage switch

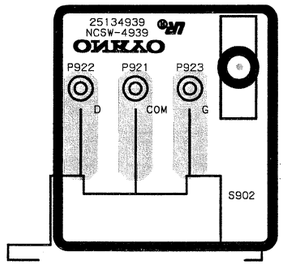

NASW-4940 Input Selector switch

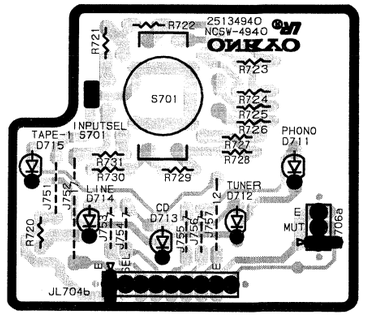

NADG-4934 Microprocessor circuit

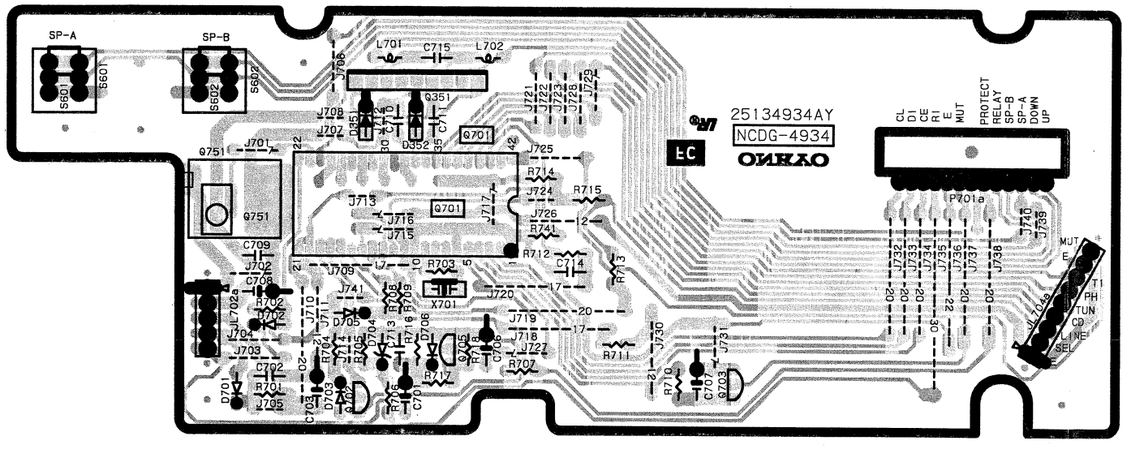

NAETC-4936 Volume control circuit

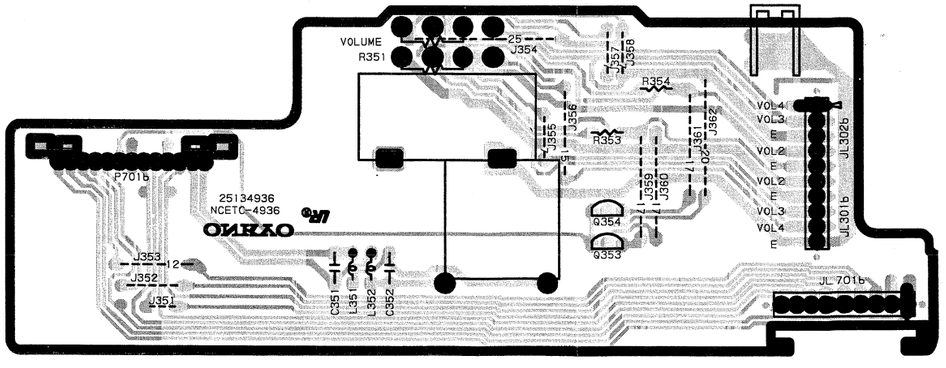

BLOCK DIAGRAM

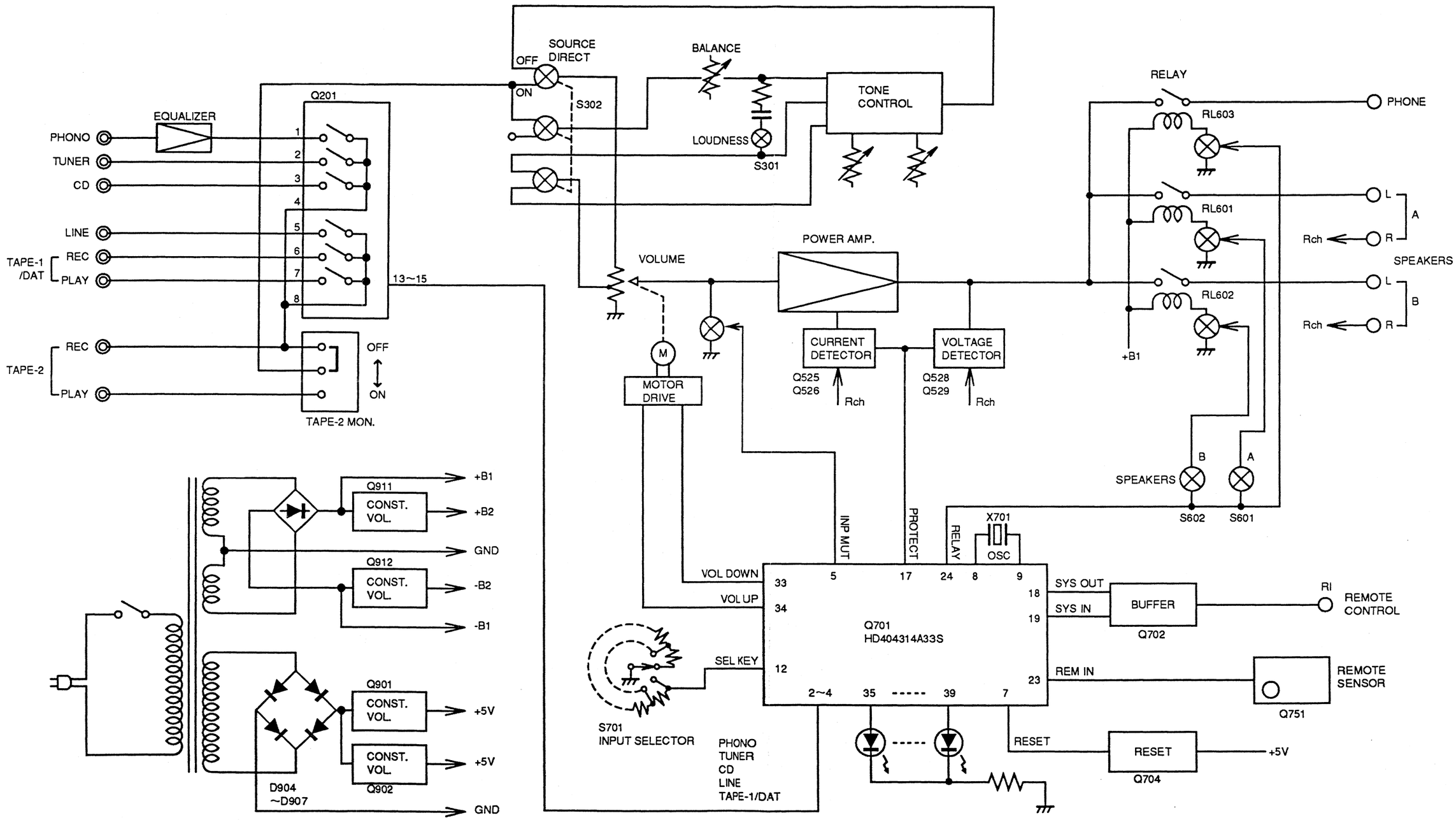

Downloaded from www.linephaze.com - Find specs, manuals and used listings across thousands of audio products.

Downloaded from www.linephaze.com - Find specs, manuals and used listings across thousands of audio products.

SCHEMATIC DIAGRAM MODEL A-8031

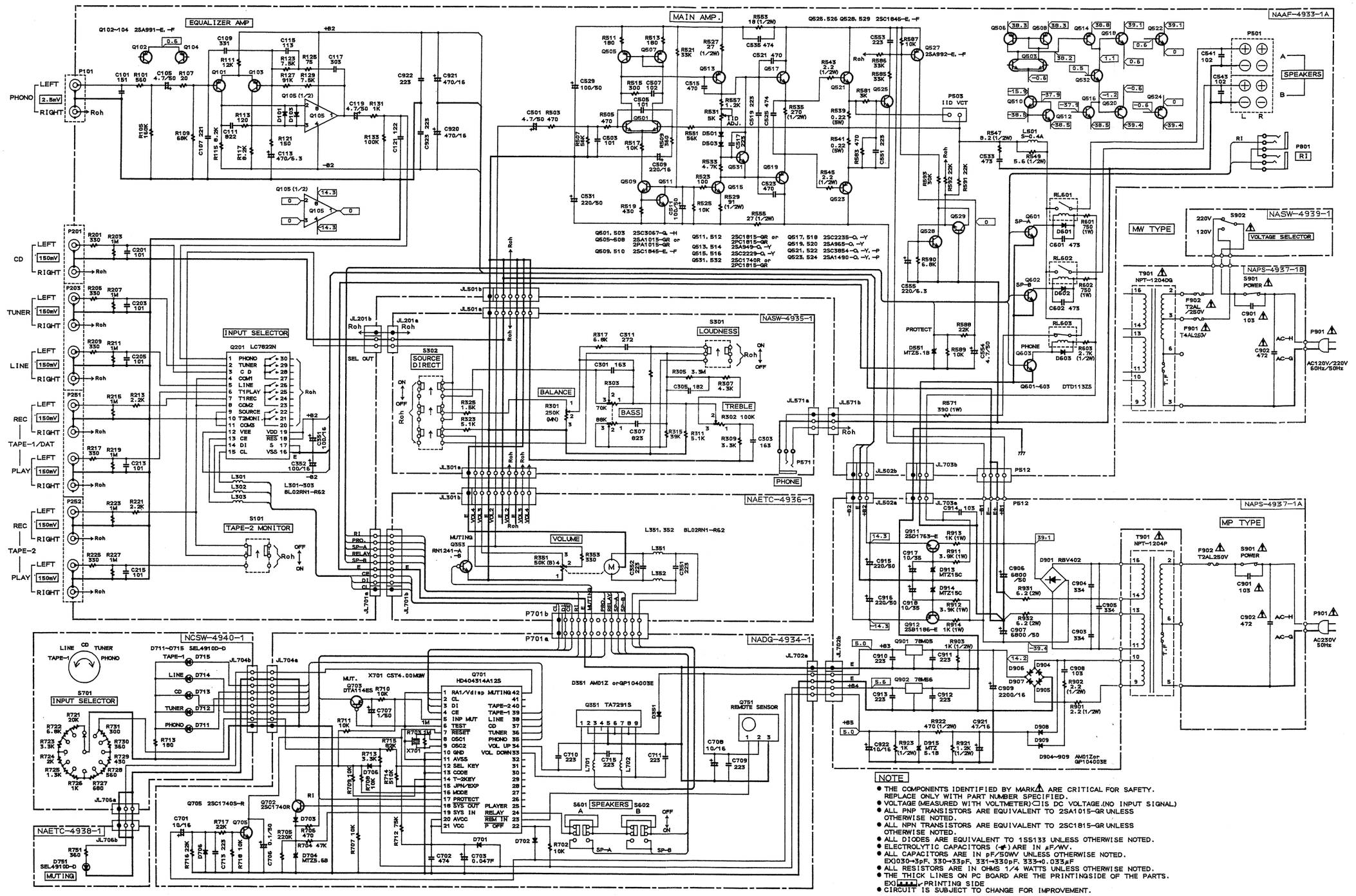

NOTE

- THE COMPONENTS IDENTIFIED BY MARK⚠ ARE CRITICAL FOR SAFETY. REPLACE ONLY WITH PART NUMBER SPECIFIED.
- VOLTAGE (MEASURED WITH VOLTMETER)□IS DC VOLTAGE.(NO INPUT SIGNAL)
- ALL PNP TRANSISTORS ARE EQUIVALENT TO 2SA1015-QR UNLESS OTHERWISE NOTED.
- ALL NPN TRANSISTORS ARE EQUIVALENT TO 2SC1815-QR UNLESS OTHERWISE NOTED.
- ALL DIODES ARE EQUIVALENT TO 1SS133 UNLESS OTHERWISE NOTED.
- ELECTROLYTIC CAPACITORS (◆) ARE IN μF/WV.
- ALL CAPACITORS ARE IN pF/50WV UNLESS OTHERWISE NOTED. EX)030→3pF, 330→33pF, 331→330pF, 333→0.033μF
- ALL RESISTORS ARE IN OHMS 1/4 WATTS UNLESS OTHERWISE NOTED.
- THE THICK LINES ON PC BOARD ARE THE PRINTINGSIDE OF THE PARTS. EX)▬▬▬▬PRINTING SIDE
- CIRCUIT IS SUBJECT TO CHANGE FOR IMPROVEMENT.

ONKYO CORPORATION

PRECAUTIONS

1. Replacing the fuses
   For continued protection against risk fire, replace only with same type and same rating fuse.

CIRCUIT NO.	PART NO.	DESCRIPTION
F902	252074	2A-SE-EAK, Primary fuse

ONKYO CORPORATION
Sales Planning & Promotion Dept.: 2-1, Nisshin-cho, Neyagawa-shi, OSAKA 572, JAPAN
Tel: 0720-31-8111 Fax: 0720-33-5222

ONKYO U.S.A CORPORATION
200 Williams Drive, Ramsey, N.J. 07446, U.S.A.
Tel: 201-825-7950 Fax: 201-825-8150

ONKYO DEUTSCHLAND GMBH ELECTRONICS
Industriestrasse 18-20, 82110 Germering, GERMANY
Tel: 089 84 93 20 Fax: 089 84 93 226

ONKYO FRANCE
Immeuble Le Diamant, Domaine Technologique de Saclay, 4 Rue René Razel,
91892 SACLAY, FRANCE Tel: (1) 69 33 14 00 Fax: (1) 69 41 35 84

PN. 0M3477 A405 Printed in Japan

Downloaded from www.linephaze.com - Find specs, manuals and used listings across thousands of audio products.